***REVISED**
**POLK COUNTY BOARD**
**MEETING LOCATION:**
**POLK COUNTY ENVIRONMENTAL SERVICES (TRANSFER STATION)**
**320 INGERSOLL AVENUE**
**CROOKSTON, MN**
**AGENDA**
**OCTOBER 6, 2020**

**8:00 A.M.** **MEETING OPEN/CONVENE**
**CALL TO ORDER**
**PLEDGE ALLEGIANCE TO FLAG**
**REVIEWAL & APPROVAL OF THE AGENDA**
**CONSENT AGENDA**

1. **Approve Auditor Warrants**
2. **Approve payment to Innovative Office Solutions, Minneapolis, MN in the amount of $126.91**

**COUNTY BOARD MEMBERS ISSUE FORUM**

**8:25** **KAREN WARMACK – SOCIAL SERVICES**

1. **Contract with MN Department of Human Services for Adult Mental Health Initiative and/or Community Support Program Funding**
2. **Office Support Specialist Replacement Request**
3. **Resolution (2020-81) Accepting & Distributing Holiday Gifts**
4. **Resolution (2020-82) Accepting Financial Contribution On Behalf Of Polk County Social Services From The VFW, East Grand Forks, MN**

**8:35** **JIM TADMAN - SHERIFF**

1. **Polk County Sheriff's Office Received A Request For Old Emergency Equipment**
2. **Resolution (2020-80) Accepting Financial Donations On Behalf Of Polk County Sheriff's Office From Crookston Welding**
3. ***Approve Hiring A Transport Deputy Position**

**8:40** **JAKE SNYDER – PLANNING AND ZONING**

1. **Resolution (2020-83) Conditional Use Permit For Steven & Tammy Larson For Hooking A Septic System To An Accessory Structure**
2. **Resolution (2020-84) Conditional Use Permit For Neal Kauffmann Jr. For Hooking A Septic System To An Accessory Structure**
3. **Resolution (2020-85) Revocation Of Recorded Resolution 2018-58 Document A000716972 Recorded September 12, 2018**
4. **Aquatic Invasive Species Project Request – Union Lake Sarah Improvement District (ULSID)**

**9:20** **SARAH REESE – PUBLIC HEALTH**

1. **Medical Professional Liability Policy**
2. **Advertisement & Hiring Wellness Coordinator – Dental Innovation Coordinator**
3. **COVID-19 Update**

**9:30** **CHUCK WHITING - ADMINISTRATOR**

1. **CARES Funds Status**
2. **2021 Budget Status**

**ADJOURN**

**If you need any type of accommodation to participate in the Polk County Board meeting, please contact Chuck Whiting at (218) 281-5408 at least 1 working day before the meeting. This Board agenda is subject to change without notice.**

AUDITOR WARRANTS 09/01/2020

| Vendor Name | Amount |
|---|---|
| ENTERPRISE FM TRUST | 5,698.49 |
| Fosston Municipal Utilities | 4,893.10 |
| Kustom Kollision LLC | 2,039.70 |
| Northwest Asphalt & Maintenance | 133,579.50 |
| Polk County | 86,627.30 |
| Polk County Administrator | 13,272.87 |
| Polk County Environmental Services | 4,048.95 |
| Premier Signs | 6,600.00 |
| Reynolds Harbott Knutson & Larson PLLF | 7,259.00 |
| Sather Law Office Ltd | 4,791.55 |
| University Of North Dakota | 6,250.28 |
| 11 Payments less than 2000 | 3,606.14 |
| **Final Total:** | 278,666.88 |

AUDITOR WARRANTS 09/01/2020

| Vendor Name | Amount |
|---|---|
| 1 Payments less than 2000 | 15.00 |
| **Final Total:** | 15.00 |

AUDITOR WARRANTS 09/08/2020

| Vendor Name | Amount |
|---|---|
| Becker County Human Services | 11,716.47 |
| City Of Fosston | 14,514.29 |
| Clay County Public Health | 14,827.94 |
| Cole Papers Inc | 3,260.72 |
| Diversified Contractors Inc | 359,480.00 |
| Great Plains Natural Gas Co | 2,385.72 |
| Halstad Telephone Co | 9,543.70 |
| Hedlund Backhoe Service | 19,409.00 |
| Hedlund Backhoe Service | 10,000.00 |
| Knife River Materials | 2,297,289.42 |
| Kustom Kollision LLC | 17,892.81 |
| Norman County Public Health | 47,757.18 |
| Northdale Oil Inc | 13,730.73 |
| Olson & Sons Excavating | 12,300.00 |
| Ottertail Power Co | 4,012.55 |
| Ottertail Public Health | 16,270.12 |
| Polk County Public Health | 80,444.93 |
| Reserve Account | 15,000.00 |
| Wild Rice Elec Co- Op Inc | 3,424.01 |
| Wm D Scepaniak Inc | 216,139.67 |
| 8 Payments less than 2000 | 3,803.57 |
| **Final Total:** | 3,173,202.83 |

AUDITOR WARRANTS 09/15/2020

| Vendor Name | Amount |
|---|---|
| BELTRAMI COUNTY SOLID WASTE | 2,634.07 |
| Crookston City | 3,000.00 |
| ENTERPRISE FM TRUST | 3,263.29 |
| Fertile Oil Company | 15,478.12 |
| Fjerstad/Doug | 5,000.00 |
| Fosston Municipal Utilities | 42,102.09 |
| Garden Valley Technologies | 2,820.71 |
| GreatAmerica Financial Services | 9,891.63 |
| Information Systems Corp | 18,316.00 |
| Johnson Controls Fire Protection LP | 5,896.22 |
| Knife River Materials | 695,193.56 |
| Northside Express | 5,423.92 |
| Ottertail Power Co | 29,874.26 |
| Polk County Administrator | 2,199.00 |
| SeaChange Printing & Marketing | 8,078.75 |
| Verizon Wireless | 5,854.58 |
| 31 Payments less than 2000 | 15,183.41 |
| **Final Total:** | 870,209.61 |

AUDITOR WARRANTS 09/15/2020

| Vendor Name | Amount |
|---|---|
| Crookston City | 2,359.80 |
| 3 Payments less than 2000 | 850.96 |
| **Final Total:** | 3,210.76 |

AUDITOR WARRANTS 09/22/2020

| Vendor Name | Amount |
|---|---|
| Altru Health System | 2,653.00 |
| City Of Fosston | 150,000.00 |
| Crookston Water Department | 2,922.73 |
| Custom Aire | 18,838.74 |
| ENTERPRISE FM TRUST | 4,135.76 |
| Ferfuson Brothers Excavating Inc | 68,628.00 |
| Fischer Rust, Stock & Rust, PLLC | 2,372.58 |
| Fosston Municipal Utilities | 2,446.55 |
| Hardwick & Nelson Law PLLC | 4,836.50 |
| Knife River Materials | 149,706.39 |
| Kronos SaaShr Inc | 3,565.75 |
| Lepier Oil Company Inc | 5,709.13 |
| NW MN Multi- County HRA | 140,000.00 |
| Occupational Development Ctr | 25,000.00 |
| Polk County Dac | 100,000.00 |
| Polk County Public Health | 3,001.87 |
| Reynolds Harbott Knutson & Larson PLLF | 2,490.50 |
| RJ Zavoral & Sons Inc | 43,662.38 |
| Tri County Community Corr | 100,000.00 |
| West Polk Soil & Water | 10,000.00 |
| 22 Payments less than 2000 | 14,416.10 |
| **Final Total:** | 854,385.98 |

AUDITOR WARRANTS 09/25/2020

| Vendor Name | Amount |
|---|---|
| Bethany Board & Lodge | 7,000.00 |
| Climax- Shelly School ISD 0592 | 9,112.00 |
| Community Health Services, Inc. | 10,000.00 |
| Cornerstone Residence | 9,000.00 |
| Crookston Public Schools | 52,902.00 |
| East Grand Forks Public Schools | 83,780.00 |
| East Polk County Dac | 25,000.00 |
| Fair Meadow Nursing Home | 12,000.00 |
| Fisher School District 600 | 10,840.00 |
| Fosston School District 601 | 26,645.00 |
| Independence Plus Inc | 20,000.00 |
| New Americans Integrations Center | 10,000.00 |
| North Country Food Bank | 100,000.00 |
| Northwestern Mental Health Center | 75,000.00 |
| Sacred Heart Catholic School | 18,354.00 |
| School District 599 Treas | 20,383.00 |
| Tri- Valley Opportunity Council | 100,000.00 |
| Villa St Vincent | 16,000.00 |
| Win- E- Mac Public School | 20,643.00 |
| 1 Payments less than 2000 | 1,925.00 |
| **Final Total:** | 628,584.00 |

AUDITOR WARRANTS 09/29/2020

| Vendor Name | Amount |
|---|---|
| Good Samaritan Heritage Grove | 13,000.00 |
| Norman County Public Health | 3,280.71 |
| Northwest Asphalt & Maintenance | 7,030.50 |
| Polk County | 78,269.25 |
| Polk County Public Health | 10,869.77 |
| Ryans's Backhoe Service LLC | 18,116.45 |
| 7 Payments less than 2000 | 2,494.54 |
| **Final Total:** | 133,061.22 |

**MANUAL WARRANTS 08/28/2020**

| Vendor Name | Amount |
|---|---|
| Internal Revenue Service | 16,945.90 |
| Minnesota Revenue | 1,703.71 |
| **Final Total:** | 18,649.61 |

**MANUAL WARRANTS 09/04/2020**

| Vendor Name | Amount |
|---|---|
| Internal Revenue Service | 166,874.52 |
| Minnesota Revenue | 28,294.55 |
| **Final Total:** | 195,169.07 |

**MANUAL WARRANTS 09/08/2020**

| Vendor Name | Amount |
|---|---|
| FURTHER | 1,643.76 |
| **Final Total:** | 1,643.76 |

**MANUAL WARRANTS 09/14/2020**

| Vendor Name | Amount |
|---|---|
| FURTHER | 536.68 |
| **Final Total:** | 536.68 |

**MANUAL WARRANTS 09/18/2020**

| Vendor Name | Amount |
|---|---|
| Internal Revenue Service | 162,981.65 |
| Minnesota Revenue | 27,807.44 |
| **Final Total:** | 190,789.09 |

**MANUAL WARRANTS 09/21/2020**

| Vendor Name | Amount |
|---|---|
| Northwest Service Cooperative | 251,417.50 |
| **Final Total:** | 251,417.50 |

**MANUAL WARRANTS 09/21/2020**

| Vendor Name | Amount |
|---|---|
| Mn Dept Of Revenue | 1,618.00 |
| **Final Total:** | 1,618.00 |

**MANUAL WARRANTS 09/21/2020**

| Vendor Name | Amount |
|---|---|
| Minnesota Revenue | 4,615.00 |
| Minnesota Revenue | 651.51 |
| Mn Dept Of Rev Tax Division | 111,697.18 |
| Mn Dept Of Revenue | 690.00 |
| Mn Dept Of Revenue | 1,283.00 |
| **Final Total:** | 118,936.69 |

**MANUAL WARRANTS 09/21/2020**

| Vendor Name | Amount |
|---|---|
| FURTHER | 1,537.78 |
| **Final Total:** | 1,537.78 |

**MANUAL WARRANTS 09/21/2020**

| Vendor Name | Amount |
|---|---|
| Internal Revenue Service | 32,474.20 |
| Minnesota Revenue | 5,441.39 |
| **Final Total:** | 37,915.59 |

**MANUAL WARRANTS 09/25/2020**

| Vendor Name | Amount |
|---|---|
| FURTHER | 3,558.10 |
| **Final Total:** | 3,558.10 |

# POLK COUNTY SOCIAL SERVICES

612 North Broadway, Room 302, Crookston, MN 56716-1452
Phone (218) 281-3127 * Fax (218) 281-3926
Toll Free (877) 281-3127
www.co.polk.mn.us


**TO:** Polk County Board of Commissioners

**FROM:** Karen Warmack, Director

**MEETING DATE:** October 6, 2020

**AGENDA ITEM**: Contract with Minnesota Department of Human Services for Adult Mental Health Initiative (AMHI) and/or Community Support Program (CSP) funding.

**SUMMARY:**


Adult Mental Health Initiative/Community Support Program funding provides community support services to meet the needs of adults with serious persistent mental illness.


**ACTION REQUESTED:** (INFORMATION ONLY/MOTION/RESOLUTION)

1. Board approval of the AMHI/CSP contract with Department of Human Services effective January 1, 2021 through December 31, 2022. The total allocation is $3,769,988 with $862,160 for Community Support Program and $2,907,828 for Adult Mental Health Initiative.

DEPARTMENT OF HUMAN SERVICES

# Minnesota Department of Human Services County Grant Contract

This Grant Contract, and all amendments and supplements to the contract ("CONTRACT"), is between the State of Minnesota, acting through its Department of Human Services, Behavioral Health Division ("STATE") and Polk County, an independent grantee, not an employee of the State of Minnesota, located at 612 N Broadway, Crookston, MN 56716 ("COUNTY").

## RECITALS

STATE, pursuant to Minnesota Statutes, section 256.01, subdivision 2(a)(6) and 245.461 to 245.486 (the "Minnesota Comprehensive Adult Mental Health Act"), has authority to enter into contracts for the following services: create and ensure a unified, accountable, and comprehensive adult mental health system with services administered under Adult Mental Health Initiative and/or Community Support Program funding.

STATE, in accordance with Minnesota Statutes, section 13.46, is permitted to share information with COUNTY.

COUNTY represents that it is duly qualified and willing to perform the services set forth in this CONTRACT to the satisfaction of STATE.

THEREFORE, the parties agree as follows:

## CONTRACT

## 1. CONTRACT TERM AND SURVIVAL OF TERMS.

**1.1. Effective date:** This CONTRACT is effective on **January 1, 2021**, or the date that STATE obtains all required signatures under Minnesota Statutes, section 16B.98, subdivision 5, whichever is later.

**1.2. Expiration date.** This CONTRACT is valid through **December 31, 2022**, or until all obligations set forth in this CONTRACT have been satisfactorily fulfilled, whichever occurs first.

**1.3. No performance before notification by STATE.** COUNTY may not begin work under this CONTRACT, nor will any payments or reimbursements be made, until all required signatures have been obtained per Minn. Stat. § 16B.98, subd. 7, and COUNTY is notified to begin work by STATE's Authorized Representative.

**1.4. Survival of terms.** COUNTY shall have a continuing obligation after the expiration of CONTRACT to comply with the following provisions of CONTRACT: 9. Liability; 10. Information Privacy and Security; 11. Intellectual Property Rights; 13.1. State audit; and 14. Jurisdiction and Venue.

**1.5. Time is of the essence.** COUNTY will perform its duties within the time limits established in CONTRACT unless it receives written approval from STATE. In performance of CONTRACT, time is of the essence.

## 2. COUNTY'S DUTIES.

**2.1 Duties.** COUNTY shall perform duties in accordance with **Attachment A**, County Duties, which is attached and incorporated into this CONTRACT.

**2.2 Accessibility.** Any information systems, tools, content, and work products produced under this CONTRACT, including but not limited to software applications, web sites, video, learning modules, webinars, presentations, etc., whether commercial, off-the-shelf (COTS) or custom, purchased or developed, must comply with the Minnesota IT (MN.IT) Accessibility Standards, as updated on June 14, 2018. This standard requires, in part, compliance with the Web Content Accessibility Guidelines (WCAG) 2.0 (Level AA) and Section 508 Subparts A-D.

Information technology deliverables and services offered must comply with the MN.IT Services Accessibility Standards and any documents, reports, communications, etc. contained in an electronic format that COUNTY delivers to or disseminates for the STATE must be accessible. (The relevant requirements are contained under the "Standards" tab at the link above.) Information technology deliverables or services that do not meet the required number of standards or the specific standards required may be rejected and STATE may withhold payment pursuant to clause 3.2(a) of CONTRACT.

## 3. CONSIDERATION AND TERMS OF PAYMENT.

**3.1 Consideration.** STATE will pay for all services satisfactorily provided by COUNTY under this CONTRACT.

a. **Compensation.** COUNTY will be paid in accordance with **Attachment B**, Budget, which is attached and incorporated into this CONTRACT.

    1. Attachment B, "Budget", covers two full calendar years. The total budget amount indicated in Attachment B is to be dispersed over two calendar years. In calendar year 2021, COUNTY shall not invoice the STATE, and STATE shall not pay COUNTY, for more than half of the total budget amount indicated in Attachment B.
    2. All expenditures must be for services or items necessary for the delivery of those services. "Capital" purchases are prohibited. Capital purchases are defined as something which has a useful life of more than one year and a per-unit acquisition cost which exceeds $5,000 and is 1) land, buildings (facilities), equipment, and intellectual property (including software) whether acquired by purchase, construction, manufacture, lease-purchase, exchange, or through capital leases; or 2) additions, improvements, modifications, replacements,

rearrangements, reinstallations, renovations, alterations, or repairs of the items listed above that materially increase their value or useful life.

3. COUNTY must obtain STATE written approval before changing any part of the budget. Notwithstanding Clause 16.1 of CONTRACT, revisions shall be done on a form provided by the STATE. Revisions are required when adding or removing a BRASS code from the budget or adding or removing a provider(s). Shifting of funds between budget line items does not require an amendment. Amendments are required when extending the end date or changing the total grant award, pursuant to Clause 16.1 of CONTRACT. If COUNTY's approved budget changes proceed without an amendment pursuant to this clause, COUNTY must record the budget change on a form provided by STATE.

**b. Travel and subsistence expenses.** Reimbursement for travel and subsistence expenses actually and necessarily incurred as a result of COUNTY's performance under this CONTRACT shall be no greater an amount than provided in the most current Commissioner's Plan (which is incorporated by reference), promulgated by the Commissioner of Minnesota Management and Budget as specified in the Commissioner's Plan.[1] COUNTY shall not be reimbursed for travel and subsistence expenses incurred outside the geographical boundaries of Minnesota unless it has received prior written approval from STATE. Minnesota shall be considered the home state for determining whether travel is out of state.

**c. Total obligation.** The total obligation of STATE for all compensation and reimbursements to COUNTY shall not exceed **three million seven hundred sixty nine thousand nine hundred eighty eight dollars ($3,769,988)**.

**d. Withholding.** For compensation payable under this CONTRACT, which is subject to withholding under state or federal law, appropriate amounts will be deducted and withheld by STATE as required.

## 3.2. Terms of payment

**a. Advance.** The COUNTY will receive one initial payment of **four hundred seventy one thousand two hundred forty nine dollars ($471,249)** pursuant to Minnesota Administrative Rule 9535.1740 at the start of the CONTRACT. The COUNTY is not eligible to receive a cash advance from the STATE in Year 2 of the CONTRACT.

**b. Invoices.** Payments shall be made by STATE promptly after COUNTY submits an invoice for services performed and the services have been determined acceptable by STATE's authorized agent pursuant to Clause 4.1. Invoices shall be submitted via quarterly SEAGR report (DHS-2557) and on the BRASS-Based Grant Fiscal Report (DHS-2895) specific to the grant, and according to the following schedule: **following each March 31, June 30, September 30, and December 31**.

**c. Reconciliation.** Within sixty (60) days of the end of the grant period, the STATE will complete a reconciliation of payments issued against expenditures reported by the COUNTY. If actual

[1] https://mn.gov/mmb/employee-relations/labor-relations/labor/commissioners-plan.jsp

expenditures by the COUNTY are less than listed in the total approved program budget at the end of the CONTRACT, the STATE shall reduce the final payment so as not to exceed total expenditures.

## 4. CONDITIONS OF PAYMENT.

**4.1. Satisfaction of STATE.** All services provided by COUNTY pursuant to this CONTRACT shall be performed to the satisfaction of STATE, as determined at the sole discretion of its authorized representative, and in accord with all applicable federal, state, and local laws, ordinances, rules and regulations. COUNTY shall not receive payment for work found by STATE to be unsatisfactory, or performed in violation of federal, state or local law, ordinance, rule or regulation.

**4.2. Payments to subcontractors.** As required by Minn. Stat. § 16A.1245, COUNTY must pay all subcontractors, within ten (10) calendar days of COUNTY's receipt of payment from STATE for undisputed services provided by the subcontractor(s) and must pay interest at the rate of 1-1/2 percent per month or any part of a month to the subcontractor(s) on any undisputed amount not paid on time to the subcontractor(s).

**4.3. Administrative costs and reimbursable expenses.** Pursuant to Minn. Stat. § 16B.98, subd. 1, COUNTY agrees to minimize administrative costs as a condition of this grant. COUNTY shall ensure that costs claimed for reimbursement shall be actual costs, to be determined in accordance with 2 C.F.R. § 200.0 et seq., COUNTY shall not invoice STATE for services that are reimbursable via a public or private health insurance plan. If COUNTY receives funds from a source other than STATE in exchange for services, then COUNTY may not receive payment from STATE for those same services. COUNTY shall seek reimbursement from all sources before seeking reimbursement pursuant to CONTRACT.

## 5. PAYMENT RECOUPMENT.

COUNTY must reimburse STATE upon demand or STATE may deduct from future payments under this CONTRACT or future CONTRACTS the following:

**a.** Any amounts received by COUNTY from the STATE for contract services which have been inaccurately reported or are found to be unsubstantiated;

**b.** Any amounts paid by COUNTY to a subcontractor not authorized in writing by STATE;

**c.** Any amount paid by STATE for services which either duplicate services covered by other specific grants or contracts, or amounts determined by STATE as non-allowable under the line item budget, clause 2.1(a);

**d.** Any amounts paid by STATE for which COUNTY'S books, records and other documents are not sufficient to clearly substantiate that those amounts were used by COUNTY to perform contract services, in accordance with clause 1, COUNTY's Duties; and/or

**e.** Any amount identified as a financial audit exception.

## 6. CANCELLATION.

**6.1. For cause or convenience.** In accord with Minn. Stat. § 16B.04, subd. 2, the Commissioner of Administration has independent authority to cancel this CONTRACT. CONTRACT may be canceled by STATE or COUNTY at any time, with or without cause, upon thirty (30) days written notice to the other party. The thirty (30) day notice may be waived, in writing, by the party receiving notice. In the event of such a cancellation, COUNTY shall be entitled to payment, determined on a pro rata basis, for work or services satisfactorily performed. STATE has the right to suspend or terminate this CONTRACT immediately when STATE deems the health or welfare of the service recipients is endangered, when STATE has reasonable cause to believe that COUNTY has breached a material term of the CONTRACT, or when COUNTY's non-compliance with the terms of the CONTRACT may jeopardize federal financial participation.

**6.2. Insufficient funds.** STATE may immediately terminate this CONTRACT if it does not obtain funding from the Minnesota Legislature, or other funding source; or if funding cannot be continued at a level sufficient to allow for the payment of the services covered here. Termination will be by written notice to COUNTY. STATE is not obligated to pay for any services that are provided after the effective date of termination. COUNTY will be entitled to payment, determined on a pro rata basis, for services satisfactorily performed to the extent that funds are available. STATE will not be assessed any penalty if the CONTRACT is terminated because of the decision of the Minnesota Legislature, or other funding source, not to appropriate funds. STATE must provide COUNTY notice of the lack of funding within a reasonable time of STATE's receiving that notice.

**6.3. Breach.** Notwithstanding clause 6.1, upon STATE's knowledge of a curable material breach of the CONTRACT by COUNTY, STATE shall provide COUNTY written notice of the breach and ten (10) days to cure the breach. If COUNTY does not cure the breach within the time allowed, COUNTY will be in default of this CONTRACT and STATE may cancel the CONTRACT immediately thereafter. If COUNTY has breached a material term of this CONTRACT and cure is not possible, STATE may immediately terminate this CONTRACT.

## 7. AUTHORIZED REPRESENTATIVES, RESPONSIBLE AUTHORITY, and PROJECT MANAGER.

**7.1. State.** STATE's authorized representative for the purposes of administration of this CONTRACT is **Gertrude Matemba-Mutasa** or successor. Phone and email: **gertrude.matemba-mutasa@state.mn.us, 651-431-6408**. This representative shall have final authority for acceptance of COUNTY's services and if such services are accepted as satisfactory, shall so certify on each invoice submitted pursuant to Clause 3.2.

**7.2. County.** COUNTY's Authorized Representative is **Karen Warmack** or successor. Phone and email: **Karen.warmack@co.polk.mn.us**. If COUNTY's Authorized Representative changes at any time during this CONTRACT, COUNTY must immediately notify STATE.

**7.3. Information Privacy and Security.** COUNTY's responsible authority for the purposes of complying with data privacy and security for this CONTRACT is **Chuck Whiting** or successor. Phone and email: **218-470-8343, chuck.whiting@co.polk.mn.us**.

## 8. INSURANCE REQUIREMENTS.

**8.1. Worker's Compensation.** The COUNTY certifies that it is in compliance with Minn. Stat. § 176.181, subd. 2, pertaining to workers' compensation insurance coverage. The COUNTY'S employees and agents will not be considered employees of the STATE. Any claims that may arise under the Minnesota Workers' Compensation Act on behalf of these employees or agents and any claims made by any third party as a consequence of any act or omission on the part of these employees or agents are in no way the STATE'S obligation or responsibility.

## 9. LIABILITY.

To the extent provided for in Minn. Stat. §§ 466.01-466.15, the COUNTY agrees to be responsible for any and all claims or causes of action arising from the performance of this grant contract by COUNTY or COUNTY'S agents or employees. This clause shall not be construed to bar any legal remedies COUNTY may have for the STATE'S failure to fulfill its obligations pursuant to this grant.

**10. INFORMATION PRIVACY AND SECURITY.** Information privacy and security shall be governed by the "Data Sharing Agreement and Business Associate Agreement Terms and Conditions" which is attached and incorporated into this CONTRACT as **Attachment C**, except that the parties further agree to comply with any agreed-upon amendments to the Data Sharing Agreement and Business Associate Agreement.

## 11. INTELLECTUAL PROPERTY RIGHTS.

**11.1. Definitions.** Works means all inventions, improvements, discoveries (whether or not patentable or copyrightable), databases, computer programs, reports, notes, studies, photographs, negatives, designs, drawings, specifications, materials, tapes, and disks conceived, reduced to practice, created or originated by COUNTY, its employees, agents, and subcontractors, either individually or jointly with others in the performance of the CONTRACT. Works includes "Documents." Documents are the originals of any data bases, computer programs, reports, notes, studies, photographs, negatives, designs, drawings, specifications, materials, tapes, disks, or other materials, whether in tangible or electronic forms, prepared by COUNTY, its employees, agents, or subcontractors, in the performance of this CONTRACT.

**11.2. Ownership.** STATE owns all rights, title, and interest in all of the intellectual property, including copyrights, patents, trade secrets, trademarks, and service marks in the Works and Documents created and paid for under this CONTRACT. The Works and Documents will be the exclusive property of STATE and all such Works and Documents must be immediately returned to STATE by COUNTY upon completion or cancellation of this CONTRACT. To the extent possible, those Works eligible for copyright

protection under the United States Copyright Act will be deemed to be "works made for hire." If using STATE data, COUNTY must cite the data, or make clear by referencing that STATE is the source.

### 11.3. Responsibilities.

a. **Notification.** Whenever any Works or Documents (whether or not patentable) are made or conceived for the first time or actually or constructively reduced to practice by COUNTY, including its employees and subcontractors, and are created and paid for under this CONTRACT, COUNTY will immediately give STATE's Authorized Representative written notice thereof, and must promptly furnish the Authorized Representative with complete information and/or disclosure thereon. COUNTY will assign all right, title, and interest it may have in the Works and the Documents to STATE.

b. **Filing and recording of ownership interests.** COUNTY must, at the request of STATE, execute all papers and perform all other acts necessary to transfer or record STATE's ownership interest in the Works and Documents created and paid for under this CONTRACT. COUNTY must perform all acts, and take all steps necessary to ensure that all intellectual property rights in these Works and Documents are the sole property of STATE, and that neither COUNTY nor its employees, agents, or subcontractors retain any interest in and to these Works and Documents.

c. **Duty not to infringe on intellectual property rights of others.** COUNTY represents and warrants that the Works and Documents created and paid for under this CONTRACT do not and will not infringe upon any intellectual property rights of other persons or entities. Notwithstanding Clause 9, COUNTY will indemnify; defend, to the extent permitted by the Attorney General; and hold harmless STATE, at COUNTY's expense, from any action or claim brought against STATE to the extent that it is based on a claim that all or part of these Works or Documents infringe upon the intellectual property rights of others. COUNTY will be responsible for payment of any and all such claims, demands, obligations, liabilities, costs, and damages, including but not limited to, attorney's fees. If such a claim or action arises, or in COUNTY's or STATE's opinion is likely to arise, COUNTY must, at STATE's discretion, either procure for STATE the right or license to use the intellectual property rights at issue or replace or modify the allegedly infringing Works or Documents as necessary and appropriate to obviate the infringement claim. This remedy of STATE will be in addition to and not exclusive of other remedies provided by law.

**12. OWNERSHIP OF EQUIPMENT.** The STATE shall have the right to require transfer of all equipment purchased with grant funds (including title) to STATE or to an eligible non-STATE party named by the STATE. If federal funds are granted by the STATE, then disposition of all equipment purchased under this grant contract shall be in accordance with OMB Uniform Grant Guidance, 2 C.F.R. § 200.313. For all equipment having a current per unit fair market value of $5,000 or more, STATE shall have the right to require transfer of the equipment (including title) to the Federal Government. These rights will normally be exercised by STATE only if the project or program for which the equipment was acquired is transferred from one grantee to another.

## 13. AUDIT REQUIREMENTS AND COUNTY DEBARMENT INFORMATION.

### 13.1. State audit.

Under Minn. Stat. § 16B.98, subd. 8, the books, records, documents, and accounting procedures and practices of the COUNTY or other party that are relevant to the CONTRACT are subject to examination by STATE and either the legislative auditor or the state auditor, as appropriate, for a minimum of six years from the CONTRACT end date, receipt and approval of all final reports, or the required period of time to satisfy all state and program retention requirements, whichever is later.

**13.2. Independent audit.** If COUNTY conducts or undergoes an independent audit during the term of this CONTRACT, a copy of the audit must be submitted to STATE within thirty (30) days of the audit's completion.

**13.3. Federal audit requirements and COUNTY debarment information.** COUNTY certifies it will comply with 2 C.F.R § 200.501 et seq., as applicable. To the extent federal funds are used for this CONTRACT, COUNTY acknowledges that COUNTY and STATE shall comply with the requirements of 2 C.F.R. § 200.331. Non-Federal entities receiving $750,000 or more of federal funding in a fiscal year must obtain a single or program-specific audit conducted for that year in accordance with 2 C.F.R. § 200.501. Failure to comply with these requirements could result in forfeiture of federal funds.

### 13.4. Debarment by STATE, its departments, commissions, agencies or political subdivisions.

COUNTY certifies that neither it nor its principles are presently debarred or suspended by the State of Minnesota, or any of its departments, commissions, agencies, or political subdivisions. COUNTY's certification is a material representation upon which the CONTRACT award was based. COUNTY shall provide immediate written notice to STATE's authorized representative if at any time it learns that this certification was erroneous when submitted or becomes erroneous by reason of changed circumstances.

### 13.5. Certification regarding debarment, suspension, ineligibility, and voluntary exclusion – lower tier covered transactions.

COUNTY's certification is a material representation upon which CONTRACT award was based. Federal money will be used or may potentially be used to pay for all or part of the work under CONTRACT, therefore COUNTY must certify the following, as required by 2 C.F.R. § 180, or its regulatory equivalent.

**a. Instructions for Certification**

1. By signing and submitting this CONTRACT, the prospective lower tier participant is providing the certification set out below.
2. The certification in this clause is a material representation of fact upon which reliance was placed when this transaction was entered into. If it is later determined that the prospective lower tier participant knowingly rendered an erroneous certification, in addition to other remedies available to the Federal Government, the department or agency with which this transaction originated may pursue available remedies, including suspension and/or debarment.

3. The prospective lower tier participant shall provide immediate written notice to the person to which this CONTRACT is submitted if at any time the prospective lower tier participant learns that its certification was erroneous when submitted or had become erroneous by reason of changed circumstances.
4. The terms covered transaction, debarred, suspended, ineligible, lower tier covered transaction, participant, person, primary covered transaction, principal, proposal, and voluntarily excluded, as used in this clause, have the meaning set out in the Definitions and Coverages sections of rules implementing Executive Order 12549. You may contact the person to which this CONTRACT is submitted for assistance in obtaining a copy of those regulations.
5. The prospective lower tier participant agrees by submitting this response that, should the proposed covered transaction be entered into, it shall not knowingly enter into any lower tier covered transaction with a person who is proposed for debarment under 48 C.F.R. part 9, subpart 9.4, debarred, suspended, declared ineligible, or voluntarily excluded from participation in this covered transaction, unless authorized by the department or agency with which this transaction originated.
6. The prospective lower tier participant further agrees by submitting this CONTRACT that it will include this clause titled "Certification Regarding Debarment, Suspension, Ineligibility and Voluntary Exclusion--Lower Tier Covered Transaction," without modification, in all lower tier covered transactions and in all solicitations for lower tier covered transactions.
7. A participant in a covered transaction may rely upon a certification of a prospective participant in a lower tier covered transaction that it is not proposed for debarment under 48 C.F.R. part 9, subpart 9.4, debarred, suspended, ineligible, or voluntarily excluded from covered transactions, unless it knows that the certification is erroneous. A participant may decide the method and frequency by which it determines the eligibility of its principals. Each participant may, but is not required to, check the List of Parties Excluded from Federal Procurement and Nonprocurement Programs
8. Nothing contained in the foregoing shall be construed to require establishment of a system of records in order to render in good faith the certification required by this clause. The knowledge and information of a participant is not required to exceed that which is normally possessed by a prudent person in the ordinary course of business dealings.
9. Except for transactions authorized under paragraph 5 of these instructions, if a participant in a covered transaction knowingly enters into a lower tier covered transaction with a person who is proposed for debarment under 48 C.F.R. part 9, subpart 9.4, suspended, debarred, ineligible, or voluntarily excluded from participation in this transaction, in addition to other remedies available to the federal government, the department or agency with which this transaction originated may pursue available remedies, including suspension and/or debarment.

**b. Lower Tier Covered Transactions.**

1. The prospective lower tier participant certifies, by submission of this CONTRACT, that neither it nor its principals is presently debarred, suspended, proposed for debarment, declared ineligible, or voluntarily excluded from participation in this transaction by any Federal department or agency.
2. Where the prospective lower tier participant is unable to certify to any of the statements in this certification, such prospective participant shall attach an explanation to this CONTRACT.

## 14. JURISDICTION AND VENUE.

This CONTRACT, and amendments and supplements, are governed by the laws of the State of Minnesota. Venue for all legal proceedings arising out of this CONTRACT, or breach of the CONTRACT, shall be in the state or federal court with competent jurisdiction in Ramsey County, Minnesota.

## 15. CLERICAL ERRORS AND NON-WAIVER.

**15.1. Clerical error.** Notwithstanding Clause 16.1, STATE reserves the right to unilaterally fix clerical errors contained in the CONTRACT without executing an amendment. COUNTY will be informed of errors that have been fixed pursuant to this paragraph.

**15.2. Non-waiver.** If STATE fails to enforce any provision of this CONTRACT, that failure does not waive the provision or STATE's right to enforce it.

## 16. AMENDMENT, ASSIGNMENT, SEVERABILITY, ENTIRE AGREEMENT, AND DRAFTING PARTY.

**16.1. Amendments.** Any amendments to this CONTRACT shall be in writing, and shall be executed by the same parties who executed the original CONTRACT, or their successors in office.

**16.2. Assignment.** COUNTY shall neither assign nor transfer any rights or obligations under this CONTRACT without the prior written consent of STATE.

### 16.3. Entire Agreement.

**a.** If any provision of this CONTRACT is held to be invalid or unenforceable in any respect, the validity and enforceability of the remaining terms and provisions of this CONTRACT shall not in any way be affected or impaired. The parties will attempt in good faith to agree upon a valid and enforceable provision that is a reasonable substitute, and will incorporate the substitute provision in this CONTRACT according to clause 16.1.

**b.** This CONTRACT contains all negotiations and agreements between STATE and COUNTY. No other understanding regarding this CONTRACT, whether written or oral may be used to bind either party.

**16.4. Drafting party.** The parties agree that each party individually has had an opportunity to review with a legal representative, negotiate and draft this CONTRACT, and that, in the event of a dispute, the CONTRACT shall not be construed against either party.

## 17. PROCURING GOODS AND CONTRACTED SERVICES.

**17.1. Contracting and bidding requirements.** COUNTY certifies that it shall comply with Minn. Stat. § 471.345.

**17.2 Debarred vendors.** In the provision of goods or services under this CONTRACT, COUNTY must not contract with vendors who are suspended or debarred in Minnesota or under federal law. Before entering into a subcontract, COUNTY must check if vendors are suspended or debarred by referencing the Minnesota Department of Administration's Suspended/Debarred Vendor Report. A link to vendors debarred by Federal agencies is provided at the bottom of the web page.

## 18. SUBCONTRACTS.

COUNTY, as an awardee organization, is legally and financially responsible for all aspects of this award that are subcontracted, including funds provided to sub-recipients and subcontractors, in accordance with 45 C.F.R. §§ 75.351-75.352. COUNTY shall ensure that the material obligations, borne by the COUNTY in this CONTRACT, apply as between COUNTY and sub-recipients, in all subcontracts, to the same extent that the material obligations apply as between the STATE and COUNTY.

## 19. LEGAL COMPLIANCE.

**19.1 General compliance.** All performance under this CONTRACT must be in compliance with state and federal law and regulations, and local ordinances. Allegations that STATE deems reasonable, in its sole discretion, of violations of state or federal law or regulations, or of local ordinances, may result in CONTRACT cancellation or termination and/or reporting to local authorities by STATE.

**19.2 Nondiscrimination.** COUNTY will not discriminate against any person on the basis of the person's race, color, creed, religion, national origin, sex, marital status, gender identity, disability, public assistance status, sexual orientation, age, familial status, membership or activity in a local commission, or status as a member of the uniformed services. COUNTY must refrain from such discrimination as a matter of its contract with STATE. "Person" includes, without limitation, a STATE employee, COUNTY's employee, a program participant, and a member of the public. "Discriminate" means, without limitation, to: fail or refuse to hire, discharge, or otherwise discriminate against any person with respect to the compensation, terms, conditions, or privileges of employment, or; exclude from participation in, deny the benefits of, or subject to discrimination under any COUNTY program or activity.

COUNTY will ensure that all of its employees and agents comply with Minnesota Management and Budget Policy #1329 (Sexual Harassment Prohibited) and #1436 (Harassment and Discrimination Prohibited).

**19.3 Grants management policies.** COUNTY must comply with required Grants Management Policies and procedures as specified in Minn. Stat. § 16B.97, subd. 4(a)(1). Compliance under this paragraph includes, but is not limited to, participating in monitoring and financial reconciliation as required by Office of Grants Management (OGM) Policy 08-10.

**19.4 Conflict of interest.** COUNTY certifies that it does not have any conflicts of interest related to this CONTRACT, as defined by OGM Policy 08-01. COUNTY shall immediately notify STATE if a conflict of interest arises.

## 20. OTHER PROVISIONS

**20.1. No Religious Based Counseling.** COUNTY agrees that no religious based counseling shall take place under the auspices of this CONTRACT.

**20.2. Contingency Planning.** This section applies if COUNTY will be fulfilling Priority 1 or Priority 2 functions under this contract. A *Priority 1* function is a function that, for purposes of planning business continuity during an emergency or disaster, must continue 24 hours per day and 7 days per week, or be recovered within hours. A *Priority 2* function is a function that, for purposes of planning business continuity during an emergency or disaster, must be resumed within 25 hours to 5 days. Within 90 days of the execution of this CONTRACT, COUNTY and any subcontractor will have a contingency plan. The contingency plan shall:

- **a.** Ensure fulfillment of Priority 1 or Priority 2 obligations under this CONTRACT;
- **b.** Outline procedures for the activation of the contingency plan upon the occurrence of a governor or commissioner of the Minnesota Department of Health declared health emergency;
- **c.** Identify an individual as its Emergency Preparedness Response Coordinator (EPRC), the EPRC shall serve as the contact for STATE with regard to emergency preparedness and response issues, the EPRC shall provide updates to STATE as the health emergency unfolds;
- **d.** Outline roles, command structure, decision making processes, and emergency action procedures that will be implemented upon the occurrence of a health emergency;
- **e.** Provide alternative operating plans for Priority 1 or Priority 2 functions;
- **f.** Include a procedure for returning to normal operations; and
- **g.** Be available for inspection upon request.

**20.3. Open Meeting Law**. COUNTY must comply with all applicable requirements of the Open Meeting Law in Minnesota Statutes chapter 13D.

**20.4. Complaints.** COUNTY shall work cooperatively and proactively with STATE to resolve complaints received from an Individual; from an authorized representative; from a partnering entity; from a community organization; or from a state, federal, or other health oversight agency. STATE will provide technical assistance for process improvements related to complaints received.

**REMAINDER OF PAGE INTENTIONALLY LEFT BLANK**

Signature Page Follows

By signing below, the parties agree to the terms and conditions contained in this CONTRACT.

**APPROVED:**

1. **STATE ENCUMBRANCE VERIFICATION**

*Individual certifies that funds have been encumbered as required by Minnesota Statutes, chapter 16A and section 16C.05.*

By:_____

Date:_____

Contract No:_____

2. **COUNTY**

*Signatory certifies that County's articles of incorporation, by-laws, or corporate resolutions authorize Signatory both to sign on behalf of and bind the County to the terms of this Agreement. County and Signatory agree that the State Agency relies on the Signatory's certification herein.*

By:_____

Title:_____

Date:_____

3. **STATE AGENCY**

By (with delegated authority):_____

Title:_____

Date:_____

**Distribution: (fully executed contract to each)**

Contracting and Legal Compliance Division

County

State Authorized Representative

# ATTACHMENT A: COUNTY DUTIES

The following items will be evaluated throughout the contract period: 1/1/21-12/31/22.

| Objective | Description of Tasks and Deliverables | Evaluation Method |
|---|---|---|
| **AMHI only** | | |
| Have written policy and procedures governing accounting and operational procedures | • Documented agreement for multi-county initiatives (e.g., MOU, bylaws, joint powers agreement)<br>• Decision-making process document or description<br>• Contingency planning (see section 20.2 of contract)<br>• Nondiscrimination policies (see section 19.2 of contract) | Twice yearly site visits |
| Include persons with mental illness, Tribal organizations of the county/region, and the Local Advisory Council in the development, implementation, and evaluation of all Adult Mental Health Plans | • Demonstrate people with lived experience of mental health are involved in planning, implementing, and evaluating Adult Mental Health Plans<br>• Demonstrate tribal organizations are involved in planning, implementing, and evaluating Adult Mental Health Plans<br>• Demonstrate Local Advisory Councils are involved in planning, implementing, and evaluating Adult Mental Health Plans | Twice yearly site visits |
| Ensure that Adult Mental Health Initiative projects are planned and administered according to Minn. Stat. 245.4661 | • Design, plan, and improve the mental health service delivery system for adults with serious and persistent mental illness (SPMI)<br>• Include program evaluation | Twice yearly site visits |
| Meet requirements of Open Meeting Law | • Meeting information posted where community members can find it<br>• Meeting minutes and decisions are documented and publicly available | Twice yearly site visits |
| **CSP only** | | |
| Ensure that Community Support Plan services are planned and administered according to Minn. Stat. 245.4712 | • Assure sufficient community support services are available to meet the needs of adults with SPMI in the county | Twice yearly site visits |
| **AMHI and CSP** | | |
| Work to achieve the mission statement described in the Minnesota Comprehensive Adult Mental Health Act Minn. Stat. 245.461 | • Lived experience with mental illness guides the governance and services | Twice yearly site visits |

| | | |
|---|---|---|
| | • Brings together people with lived experience, providers, counties, tribes, MCOs and DHS to fully utilize all available resources to meet regional needs.<br>• Develops and provides an array of person centered services that builds on personal and cultural strengths.<br>• Utilizes a data driven model to evaluate the impact of services on health outcomes.<br>• Assures access, early intervention, coordination, and application of resources through creative partnerships. | |
| Ensure all revenue received by COUNTY and its contracted or subcontracted providers is managed according to Minnesota Rules chapter 9535.1740 subd.3 | • Submit quarterly fiscal reports / invoices to DHS for payment | Twice yearly site visits |
| Ensure their contracted providers bill eligible insurance before accessing Adult Mental Health grant funding | | Twice yearly site visits |
| Have a transition plan that complies with Minnesota Statute 245.466 subd.3a | • Transition plan for continuity of care in the event of contract termination with a community mental health center<br>• Transition plan for continuity of care in the event of contract termination with a community support services provider | Twice yearly site visits |
| Complete all required data reporting and ensure their contracted providers are completing all required data reporting | • MHIS data reporting completed twice a year<br>• SSIS data reporting completed<br>• Supplemental spreadsheet reporting completed twice a year<br>• Effort made to have providers reporting into MHIS instead of the supplemental spreadsheet | Twice yearly site visits |
| Meet the policy requirements from the Office of Grants Management for all subcontracts that are over $50,000 | • Grant monitoring plan for all subcontracts over $50,000, including site visits and financial reconciliation<br>• Conflict of interest assessed and documented | Twice yearly site visits |
| Incorporate the National Culturally and Linguistically Appropriate Services (CLAS) Standards into County administered services and contracts/agreements with community service providers | • Demonstrated effort to provide effective, equitable, understandable, and respectful quality care and services that are responsive to diverse cultural health beliefs and practices, preferred languages, health literacy, and other communication needs | Twice yearly site visits |

## Attachment B: Budget

| Grant Budget Summary | | | | |
|---|---|---|---|---|
| **2895 BRASS Code Summary for:** | | ***Polk*** | | |
| **Funding Totals** | | | | |
| | **CSP** | **AMHI** | **Moose Lake** | **TOTAL** |
| **TOTAL ALLOCATION** | $ 862,160 | $ 2,907,828 | $ - | $ 3,769,988 |
| **Requested Funding By BRASS Code** | | | | |
| **BRASS CODE** | **CSP** | **AMHI** | **Moose Lake** | **TOTAL** |
| 402 | $ - | $ - | $ - | $ - |
| 403 | $ 74,632 | $ 211,763 | $ - | $ 286,395 |
| 408 | $ - | $ - | $ - | $ - |
| 416 | $ 292,672 | $ 144,328 | $ - | $ 437,000 |
| 418 | $ - | $ 205,855 | $ - | $ 205,855 |
| 420 | $ - | $ 100,000 | $ - | $ 100,000 |
| 431 | $ - | $ 149,544 | $ - | $ 149,544 |
| 434 | $ - | $ 888,576 | $ - | $ 888,576 |
| 436 | $ - | $ - | $ - | $ - |
| 437 | $ - | $ - | $ - | $ - |
| 438 | $ - | $ - | $ - | $ - |
| 443 | $ - | $ 147,015 | $ - | $ 147,015 |
| 446 | $ 269,372 | $ 451,142 | $ - | $ 720,514 |
| 451 | $ - | $ - | $ - | $ - |
| 452 | $ - | $ - | $ - | $ - |
| 454 | $ 21,056 | $ 240,544 | $ - | $ 261,600 |
| 468 | $ - | $ - | $ - | $ - |
| 469 | $ - | $ - | $ - | $ - |
| 474 | $ - | $ 192,155 | $ - | $ 192,155 |
| 491 | $ - | $ - | $ - | $ - |
| 493 | $ 204,428 | $ 176,906 | $ - | $ 381,334 |

# ATTACHMENT C –
# DATA SHARING AND BUSINESS ASSOCIATE AGREEMENT
# TERMS AND CONDITIONS

This Attachment sets forth the terms and conditions in which STATE will share data with and permit COUNTY to Use or Disclose Protected Information that the parties are legally required to safeguard pursuant to the Minnesota Government Data Practices Act ("MGDPA") under Minnesota Statutes, chapter 13, the Health Insurance Portability and Accountability Act rules and regulations codified at 45 C.F.R. Parts 160, 162, and 164 ("HIPAA"), and other Applicable Safeguards.

The parties agree to comply with all applicable provisions of the MGDPA, HIPAA, and any other Applicable Safeguard that applies to the Protected Information.

General Description of Protected Information That Will Be Shared: Adult Mental Health Initiative (AMHI) and/or Community Support Program (CSP) data for the term of the contract

Purpose for Sharing Protected Information and Expected Outcomes: Review of AMHI and/or CSP grantee projects to assure program integrity, quality, and effectiveness.

STATE is permitted to share the Protected Information with COUNTY pursuant to: Minnesota Data Practices Act under Minnesota Statutes, Chapter 13

It is expressly agreed that COUNTY is a "business associate" of STATE, as defined by HIPAA under 45 C.F.R. § 160.103, "Definitions." The Disclosure of Protected Health Information to COUNTY that is subject to the Health Insurance Portability Accountability Act (HIPAA) is permitted by 45 C.F.R. § 164.502(e)(1)(i), "Standard: Disclosures to Business Associates."

It is understood by COUNTY that, as a business associate under HIPAA, COUNTY is directly liable under the HIPAA Rules and subject to civil and, in some cases, criminal penalties for making Uses and Disclosures of Protected Health Information that are not authorized by contract or permitted by law. COUNTY is also directly liable and subject to civil penalties for failing to safeguard electronic Protected Health Information in accordance with the HIPAA Security Rule, Subpart C of 45 C.F.R. Part 164, "Security and Privacy."

DEFINITIONS

A. "Agent" means COUNTY'S employees, contractors, subcontractors, and other non-employees and representatives.

B. "Applicable Safeguards" means the state and federal safeguards listed in subsection 2.1.A of this Attachment.

C. "Breach" means the acquisition, access, Use, or Disclosure of unsecured Protected Health Information in a manner not permitted by HIPAA, which compromises the security or privacy of Protected Health Information.

D. "Business Associate" shall generally have the same meaning as the term "business associate" found in 45 C.F.R. § 160.103, and in reference to the party in the Contract and this Attachment, shall mean COUNTY.

E. "Contract" means the Grant Contract between STATE and COUNTY to which this Attachment is attached.

F. "Disclose" or "Disclosure" means the release, transfer, provision of access to, or divulging in any manner of information by the entity in possession of the Protected Information.

G. "HIPAA" means the rules and regulations codified at 45 C.F.R. Parts 160, 162, and 164.

H. "Individual" means the person who is the subject of protected information.

I. "Privacy Incident" means a violation of an information privacy provision of any applicable state and federal law, statute, regulation, rule, or standard, including those listed in the Contract and this Attachment.

J. "Protected Information" means any information, regardless of form or format, which is or will be Used by STATE or COUNTY under the Contract that is protected by federal or state privacy laws, statutes, regulations, policies, or standards, including those listed in this Attachment. This includes, but is not limited to, individually identifiable information about a State, county or tribal human services agency client or a client's family member. Protected Information also includes, but is not limited to, Protected Health Information, as defined below, and Protected Information maintained within or accessed via a State information management system, including a State "legacy system" and other State application.

K. "Protected Health Information" is a subset of Protected Information (defined above) and has the same meaning as the term "protected health information" found in 45 C.F.R. § 160.103. For the purposes of this Attachment, it refers only to that information that is received, created, maintained, or transmitted by COUNTY as a Business Associate on behalf of STATE.

L. "Security Incident" means the attempted or successful unauthorized accessing, Use, or interference with system operations in an information management system or application. "Security Incident" does not include pings and other broadcast attacks on a system's firewall, port scans, unsuccessful log-on attempts, denials of service, and any combination of the above,

provided that such activities do not result in the unauthorized exposure, viewing, obtaining, accessing, or Use of Protected Information.

M. "Use" or "Used" means any activity involving Protected Information including its creation, collection, access, acquisition, modification, employment, application, utilization, examination, analysis, manipulation, maintenance, dissemination, sharing, Disclosure, transmission, or destruction. "Use" includes any of these activities whether conducted manually or by electronic or computerized means.

## 1. INFORMATION EXCHANGED

**1.1** This Attachment governs the data that will be exchanged pursuant to COUNTY performing the services described in the Contract. The data exchanged under the Contract will include: BRASS Code data by client including, but not limited to, demographic information such as age, sex, race, the number of people served, and information related to housing, employment, hospitalization, symptoms, and satisfaction with services reported by COUNTY and its SUBCONTRACTORS to STATE. Data is submitted via the Mental Health Information System (MHIS), the Social Services Information System (SSIS), and other encrypted spreadsheet as directed by the STATE.

**1.2** The data exchanged under the Contract is provided to STATE by COUNTY and its SUBCONTRACTORS for: review of AMHI and/or CSP grantee projects to assure program integrity, quality, and effectiveness and to ensure COUNTY is meeting the terms of the Contract.

**1.3** It is permissible to share the Protected Information between STATE and COUNTY pursuant to: the terms and conditions of the Contract and this Data Sharing and Business Associate Agreement in accordance with the Minnesota Data Practices Act under Minnesota Statutes, Chapter 13.

## 2. INFORMATION PRIVACY AND SECURITY

COUNTY and STATE must comply with the MGDPA, HIPAA, and all other Applicable Safeguards as they apply to all data provided by STATE under the Contract, and as they apply to all data created, collected, received, stored, Used, maintained, or disseminated by COUNTY under the Contract. The civil remedies of Minn. Stat. § 13.08, "Civil Remedies," apply to COUNTY and STATE. Additionally, the remedies of HIPAA apply to the release of data governed by HIPAA.

### 2.1 Compliance with Applicable Safeguards.

**A. State and Federal Safeguards.** The parties acknowledge that the Protected Information to be shared under the terms of the Contract may be subject to one or

more of the laws, statutes, regulations, rules, policies, and standards, as applicable and as amended or revised ("Applicable Safeguards"), listed below, and agree to abide by the same.

1. Health Insurance Portability and Accountability Act rules and regulations codified at 45 C.F.R. Parts 160, 162, and 164 ("HIPAA");
2. Minnesota Government Data Practices Act (Minn. Stat. Chapter 13);
3. Minnesota Health Records Act (Minn. Stat. § 144.291–144.34);
4. Confidentiality of Alcohol and Drug Abuse Patient Records (42 U.S.C. § 290dd-2, "Confidentiality of Records," and 42 C.F.R. Part 2, "Confidentiality of Substance Use Disorder Patient Records");
5. Tax Information Security Guidelines for Federal, State and Local Agencies (26 U.S.C. § 6103, "Confidentiality and Disclosure of Returns and Return Information," and Internal Revenue Service Publication 1075;
6. U.S. Privacy Act of 1974;
7. Computer Matching Requirements (5 U.S.C. § 552a, "Records Maintained on Individuals");
8. Social Security Data Disclosure (section 1106 of the Social Security Act: 42 USC § 1306, "Disclosure of information in Possession of Social Security Administration or Department of Health and Human Services");
9. Disclosure of Information to Federal, State and Local Agencies (DIFSLA Handbook, Internal Revenue Service Publication 3373);
10. Final Exchange Privacy Rule of the Affordable Care Act (45 C.F.R. § 155.260, "Privacy and Security of Personally Identifiable Information,");
11. NIST Special Publication 800-53, "Security and Privacy Controls for Federal Information Systems and Organizations," Revision 4 (NIST.SP.800-53r4), and;
12. All state of Minnesota "Enterprise Information Security Policies and Standards."[2]

The parties further agree to comply with all other laws, statutes, regulations, rules, and standards, as amended or revised, applicable to the exchange, Use and Disclosure of data under the Contract.

**B. Statutory Amendments and Other Changes to Applicable Safeguards.** The Parties agree to take such action as is necessary to amend the Contract and this Attachment from time to time as is necessary to ensure, current, ongoing compliance with the requirements of the laws listed in this Section or in any other applicable law.

## 2.2 COUNTY Data Responsibilities

### A. Use Limitation.

1. *Restrictions on Use and Disclosure of Protected Information.* Except as otherwise

[2] *See* https://mn.gov/mnit/government/policies/security/

authorized in the Contract or this Attachment, COUNTY may only Use or Disclose Protected Information as minimally necessary to provide the services to STATE as described in the Contract and this Attachment, or as otherwise required by law, provided that such Use or Disclosure of Protected Information, if performed by STATE, would not violate the Contract, this Attachment, HIPAA, or state and federal statutes or regulations that apply to the Protected Information.

2. *Federal tax information.* To the extent that Protected Information Used under the Contract constitutes "federal tax information" (FTI), COUNTY shall ensure that this data only be Used as authorized under the Patient Protection and Affordable Care Act, the Internal Revenue Code, 26 U.S.C. § 6103(C), and IRS Publication I 075.

**B. Individual Privacy Rights.** COUNTY shall ensure Individuals are able to exercise their privacy rights regarding Protected Information, including but not limited to the following:

1. *Complaints.* COUNTY shall work cooperatively and proactively with STATE to resolve complaints received from an Individual; from an authorized representative; or from a state, federal, or other health oversight agency.

2. *Amendments to Protected Information Requested by Data Subject Generally.* Within three (3) business days, COUNTY must forward to STATE any request to make any amendment(s) to Protected Information in order for STATE to satisfy its obligations under Minn. Stat. § 13.04, "Rights of Subjects of Data," subd. 4. If the request to amend Protected Information pertains to Protected Health Information, then COUNTY must also make any amendment(s) to Protected Health Information as directed or agreed to by STATE pursuant to 45 C.F.R. § 164.526, "Amendment of Protected Health Information," or otherwise act as necessary to satisfy STATE or COUNTY's obligations under 45 CF.R. § 164.526 (including, as applicable, Protected Health Information in a designated record set).

**C. Background Review and Reasonable Assurances of Agents.**

1. *Reasonable Assurances.* COUNTY represents that, before any Agent is allowed to Use or Disclose Protected Information, COUNTY has conducted and documented a background review of the Agent sufficient to provide COUNTY with reasonable assurances that the Agent will fully comply with the terms of the Contract, this Attachment and Applicable Safeguards.

2. **Documentation.** COUNTY shall make available documentation required by this Section upon request by STATE.

**D. Ongoing Responsibilities to Safeguard Protected Information.**

1. *Privacy and Security Safeguards.* COUNTY shall develop, maintain, and enforce policies, procedures, and administrative, technical, and physical safeguards that comply with the Applicable Safeguards to ensure the privacy and security of the Protected Information, and to prevent the Use or Disclosure of Protected Information, except as expressly permitted by the Contract and this Attachment.

2 **Electronic Protected Information.** COUNTY shall implement and maintain appropriate safeguards with respect to electronic Protected Information, and comply with Subpart C of 45 C.F.R. Part 164 (HIPAA Security Rule) with respect to to prevent the Use or Disclosure other than as provided for by the Contract or this Attachment.

3. *Monitoring Agents.* COUNTY shall ensure that any Agent to whom COUNTY Discloses Protected Information on behalf of STATE, or whom COUNTY employs or retains to create, receive, Use, store, Disclose, or transmit Protected Information on behalf of STATE, agrees in writing to the same restrictions and conditions that apply to COUNTY under the Contract and this Attachment with respect to such Protected Information, and in accordance with 45 C.F.R. §§ 164.502, "Use and Disclosure of Protected Health Information: General Rules," subpart (e)1)(ii) and 164.308, "Administrative Safeguards," subpart (b)(2).

4. **Encryption**. According to the state of Minnesota's "Enterprise Information Security Policies and Standards,"[3] COUNTY must use encryption to store, transport, or transmit Protected Information and must not use unencrypted email to transmit Protected Information.

5. *Minimum Necessary Access to Protected Information.* COUNTY shall ensure that its Agents acquire, access, Use, and Disclose only the minimum necessary Protected Information needed to complete an authorized and legally permitted activity.

6. *Training and Oversight.* COUNTY shall ensure that Agents are properly trained and comply with all Applicable Safeguards and the terms of the Contract and this Attachment.

**E. Responding to Privacy Incidents, Security Incidents, and Breaches.** COUNTY will comply with this Section for all Protected Information shared under the Contract. Additional obligations for specific kinds of Protected Information shared under the Contract are addressed in subsection 2.2(F), "Reporting Privacy Incidents, Security

[3] https://mn.gov/mnit/government/policies/security/

Incidents, and Breaches."

1. *Mitigation of harmful effects.* Upon discovery of any actual or suspected Privacy Incident, Security Incident, and/or Breach, COUNTY will mitigate, to the extent practicable, any harmful effect of the Privacy Incident, Security Incident, and/or Breach. Mitigation may include, but is not limited to, notifying and providing credit monitoring to affected Individuals.

2. *Investigation.* Upon discovery of any actual or suspected Privacy Incident, Security Incident, and/or Breach, COUNTY will investigate to (1) determine the root cause of the incident, (2) identify Individuals affected, (3) determine the specific Protected Information impacted, and (4) comply with notification and reporting provisions of the Contract, this Attachment, and applicable law.

3. *Corrective action.* Upon identifying the root cause of any Privacy Incident, Security Incident, and/or Breach, COUNTY will take corrective action to prevent, or reduce to the extent practicable, any possibility of recurrence. Corrective action may include, but is not limited to, patching information system security vulnerabilities, sanctioning Agents, and/or revising policies and procedures.

4. *Notification to Individuals and others; costs incurred.*

   a. **Protected Information.** COUNTY will determine whether notice to data subjects and/or any other external parties regarding any Privacy Incident or Security Incident is required by law. If such notice is required, COUNTY will fulfill the STATE's and COUNTY's obligations under any applicable law requiring notification, including, but not limited to, Minn. Stat. §§ 13.05, "Duties of Responsible Authority," and 13.055, "Disclosure of Breach in Security."

   b. **Protected Health Information.** If a Privacy Incident or Security Incident results in a Breach of Protected Health Information, as these terms are defined in this Attachment and under HIPAA, then COUNTY will provide notice to Individual data subjects under any applicable law requiring notification, including but not limited to providing notice as outlined in 45 C.F.R. § 164.404, "Notification to Individuals."

   c. **Failure to notify.** If COUNTY fails to timely and appropriately notify Individual data subjects or other external parties under subparagraph (a), then COUNTY will reimburse STATE for any costs, fines, or penalties incurred as a result of COUNTY's failure to timely provide appropriate notification.

5. *Obligation to report to STATE.* Upon discovery of a Privacy Incident, Security Incident, and/or Breach, COUNTY will report to STATE in writing as further specified in subsection 2.2(F).

a. **Communication with authorized representative.** COUNTY will send any written reports to, and communicate and coordinate as necessary with, STATE's authorized representative or designee.

b. **Cooperation of response.** COUNTY will cooperate with requests and instructions received from STATE regarding activities related to investigation, containment, mitigation, and eradication of conditions that led to, or resulted from, the Security Incident, Privacy Incident, and/or Breach, and all matters pertaining to reporting and notification of a Security Incident, Privacy Incident, and/or Breach.

c. **Information to respond to inquiries about an investigation.** COUNTY will, as soon as possible, but not later than forty-eight (48) hours after a request from STATE, provide STATE with any reports or information requested by STATE related to an investigation of a Security Incident, Privacy Incident, and/or Breach.

6. *Documentation.* COUNTY will document actions taken under paragraphs 1 through 5 of this Section, and retain this documentation for a minimum of six (6) years from the date it discovered the Privacy Incident, Security Incident, and/or Breach or the time period required by Section H, whichever is longer. COUNTY shall provide such documentation to STATE upon request.

**F. Reporting Privacy Incidents, Security Incidents, and Breaches.** COUNTY will comply with the reporting obligations of this Section as they apply to the kind of Protected Information involved. COUNTY will also comply with Subsection 2.2(E), "Responding to Privacy Incidents, Security Incidents, and Breaches," above in responding to any Privacy Incident, Security Incident, and/or Breach.

1. *Protected Health Information.* COUNTY will report Privacy Incidents, Security Incidents, and/or Breaches involving Protected Health Information as follows:

a. **Reporting Breaches to STATE.** COUNTY will report, in writing, any Breach involving Protected Health Information to STATE within five (5) calendar days of discovery, as defined in 45 C.F.R. § 164.410, "Notification by a Business Associate," subpart (a)(2), for all Breaches involving fewer than 500 Individuals, and immediately for all Breaches involving 500 or more Individuals. These reports shall include, at a minimum, the following information:

1. Identity of each Individual whose unsecured Protected Health Information has been, or is reasonably believed by COUNTY, to have been accessed, acquired, Used, or Disclosed during the incident or Breach.
2. Description of the compromised Protected Health Information.
3. Date of the Breach.
4. Date of the Breach's discovery.
5. Description of the steps taken to investigate the Breach, mitigate its

impact, and prevent future Breaches.

6. Sanctions imposed on COUNTY's Agents involved in the Breach.
7. All other information that must be included in notification to the Individual under 45 C.F.R. § 164.404(c).
8. Statement that COUNTY has notified, or will notify, impacted Individuals in accordance with 45 C.F.R. § 164.404 and, upon the completion of said notifications, provide through documentation of the recipients, date, content, and manner of the notifications.

**b.** **Reporting Breaches to external parties.** COUNTY shall timely report all Breaches involving Protected Health Information to the impacted Individuals (as specified in 45 C.F.R. § 164.404), the U.S. Department of Health and Human Services (as specified in 45 C.F.R § 164.408, "Notification to the Secretary"), and, for Breaches involving 501 or more Individuals, to the media (as specified in 45 C.F.R. § 164.406, "Notification to the Media"). As soon as possible and no later than 10 (ten) business days prior to any report to the media required by 45 C.F.R. § 164.406, COUNTY shall draft and provide to STATE for its review and approval all Breach-related reports or statements intended for the media.

**c.** **Reporting Security Incidents that do not result in a Breach to STATE.** COUNTY will report, in writing, all Security Incidents that do not result in a Breach, but involve systems maintaining Protected Health Information created, received, maintained, or transmitted by COUNTY or its Agents on behalf of STATE, to STATE on a monthly basis, in accordance with 45 C.F.R § 164.314, "Organizational Requirements."

**d.** **Reporting other violations to STATE.** COUNTY will report, in writing, any other Privacy Incident and/or violation of an Individual's privacy rights as it pertains to Protected Health Information to STATE within five (5) calendar days of discovery as defined in 45 C.F.R. § 164.410(a)(2). This includes, but is not limited to, any violation of Subpart E of 45 C.F.R. Part 164.

*4.* *Other Protected Information.* COUNTY will report all other Privacy Incidents, Security Incidents, and/or Breaches to STATE.

**a.** **Initial report.** COUNTY will report all other Privacy Incidents, Security Incidents, and/or Breaches to STATE, in writing, within five (5) calendar days of discovery. If COUNTY is unable to complete its investigation of, and response to, a Privacy Incident, Security Incident, and/or Breach within five (5) calendar days of discovery, then COUNTY will provide STATE with all information under subsections 2.2(E)(1)–(4), of this Attachment that are available to COUNTY at the time of the initial report, and provide updated reports as additional information becomes available.

**b.** **Final report.** COUNTY will, upon completion of its investigation of and response to a Privacy Incident, Security Incident, and/or Breach, or upon

STATE's request in accordance with subsection 2.2(E)(5) submit in writing a report to STATE documenting all actions taken under subsections 2.2(E)(1)–(4), of this Attachment.

G. **Designated Record Set—Protected Health Information.** If, on behalf of STATE, COUNTY maintains a complete or partial designated record set, as defined in 45 C.F.R. § 164.501, "Definitions," upon request by STATE, COUNTY shall, in a time and manner that complies with HIPAA or as otherwise directed by STATE:

1. Provide the means for an Individual to access, inspect, or receive copies of the Individual's Protected Health Information.

2. Provide the means for an Individual to make an amendment to the Individual's Protected Health Information.

H. **Access to Books and Records, Security Audits, and Remediation.** COUNTY shall conduct and submit to audits and necessary remediation as required by this Section to ensure compliance with all Applicable Safeguards and the terms of the Contract and this Attachment.

1. COUNTY represents that it has audited and will continue to regularly audit the security of the systems and processes used to provide services under the Contract and this Attachment, including, as applicable, all data centers and cloud computing or hosting services under contract with COUNTY. COUNTY will conduct such audits in a manner sufficient to ensure compliance with the security standards referenced in this Attachment.

2. This security audit required above will be documented in a written audit report which will, to the extent permitted by applicable law, be deemed confidential security information and not public data under the Minnesota Government Data Practices Act, Minn. Stat. § 13.37, "General Nonpublic Data," subd. 1(a) and 2(a).

3. COUNTY agrees to make its internal practices, books, audits, and records related to its obligations under the Contract and this Attachment available to STATE or a STATE designee upon STATE's request for purposes of conducting a financial or security audit, investigation, or assessment, or to determine COUNTY's or STATE's compliance with Applicable Safeguards, the terms of this Attachment and accounting standards. For purposes of this provision, other authorized government officials includes, but is not limited to, the Secretary of the United States Department of Health and Human Services.

4. COUNTY will make and document best efforts to remediate any control deficiencies identified during the course of its own audit(s), or upon request by STATE or other authorized government official(s), in a commercially reasonable

timeframe.

I. **Documentation Required.** Any documentation required by this Attachment, or by applicable laws, standards, or policies, of activities including the fulfillment of requirements by COUNTY, or of other matters pertinent to the execution of the Contract, must be securely maintained and retained by COUNTY for a period of six years from the date of expiration or termination of the Contract, or longer if required by applicable law, after which the documentation must be disposed of consistent with subsection 2.6 of this Attachment.

COUNTY shall document Disclosures of Protected Health Information made by COUNTY that are subject to the accounting of disclosure requirement described in 45 C.R.F. 164.528, "Accounting of Disclosures of Protected Health Information," and shall provide to STATE such documentation in a time and manner designated by STATE at the time of the request.

J. **Requests for Disclosure of Protected Information.** If COUNTY or one of its Agents receives a request to Disclose Protected Information, COUNTY shall inform STATE of the request and coordinate the appropriate response with STATE. If COUNTY Discloses Protected Information after coordination of a response with STATE, it shall document the authority used to authorize the Disclosure, the information Disclosed, the name of the receiving party, and the date of Disclosure. All such documentation shall be maintained for the term of the Contract or six years after the date of the Disclosure, whichever is later, and shall be produced upon demand by STATE.

K. **Conflicting Provisions.** COUNTY shall comply with all applicable provisions of HIPAA and with the Contract and this Attachment. To extent that the parties determine, following consultation, that the terms of this Attachment are less stringent than the Applicable Safeguards, COUNTY must comply with the Applicable Safeguards. In the event of any conflict in the requirements of the Applicable Safeguards, COUNTY must comply with the most stringent Applicable Safeguard.

L. **Data Availability.** COUNTY, or any entity with legal control of any Protected Information provided by STATE, shall make any and all Protected Information under the Contract and this Attachment available to STATE upon request within a reasonable time as is necessary for STATE to comply with applicable law.

## 2.3 Data Security.

A. **STATE Information Management System Access.** If STATE grants COUNTY access to Protected Information maintained in a STATE information management system (including a STATE "legacy" system) or in any other STATE application, computer, or

storage device of any kind, then COUNTY agrees to comply with any additional system- or application-specific requirements as directed by STATE.

**B.** **Electronic Transmission.** The parties agree to encrypt electronically transmitted Protected Information in a manner that complies with NIST Special Publications 800-52, "Guidelines for the Selection and Use of Transport Layer Security (TLS) Implementations"; 800-77, "Guide to IPsec VPNs"; 800-113, "Guide to SSL VPNs," or other methods validated under Federal Information Processing Standards (FIPS) 140-2, "Security Requirements for Cryptographic Modules." As part of its compliance with the NIST publications, and the State of Minnesota's "Enterprise Information Security Policies and Standards," DATA SHARING PARTNER must use encryption to store, transport, or transmit any Protected Information. DATA SHARING PARTNER must not use unencrypted email to send any Protected Information to anyone, including STATE.

**C.** **Portable Media and Devices.** The parties agree to encrypt Protected Information written to or stored on portable electronic media or computing devices in a manner that complies with NIST SP 800-111, "Guide to Storage Encryption Technologies for End User Devices."

## 2.4 COUNTY Permitted Uses and Responsibilities.

**A.** **Management and Administration.** Except as otherwise limited in the Contract or this Attachment, COUNTY may:

1. Use Protected Health Information for the proper management and administration of COUNTY or to carry out the legal responsibilities of COUNTY.

2. **Disclose Protected Health Information for the proper management and administration of COUNTY**, provided that:

   a. The Disclosure is required by law; or

   b. The Disclosure is required to perform the services provided to or on behalf of STATE or the Disclosure is otherwise authorized by STATE, and COUNTY:

      i. Obtains reasonable assurances from the entity to whom the Protected Health Information will be Disclosed that the Protected Health Information will remain confidential and Used or further Disclosed only as required by law or for the purposes for which it was Disclosed to the entity; and

ii. Requires the entity to whom Protected Health Information is Disclosed to notify COUNTY of any instances of which it is aware in which the confidentiality of Protected Health Information has been Breached or otherwise compromised.

**B.** **Notice of Privacy Practices.** If COUNTY's duties and responsibilities require it, on behalf of STATE, to obtain individually identifiable health information from Individual(s), then COUNTY shall, before obtaining the information, confer with STATE to ensure that any required Notice of Privacy Practices includes the appropriate terms and provisions.

**C.** **De-identify Protected Health Information.** COUNTY may use Protected Health Information to create de-identified Protected Health Information provided that COUNTY complies with the de-identification methods specified in 45 C.F.R. § 164.514, "Other Requirements Relating to Uses and Disclosures of Protected Health Information." De-identified Protected Health Information remains the sole property of STATE and can only be Used or Disclosed by COUNTY on behalf of STATE and pursuant to the Contract or by prior written approval of STATE.

**D.** **Aggregate Protected Health Information.** COUNTY may use Protected Health Information to perform data aggregation services for STATE, and any such aggregated data remains the sole property of STATE. The COUNTY must have the written approval of STATE prior to using Protected Health Information to perform data analysis or aggregation for parties other than STATE.

## 2.5 STATE Data Responsibilities

A. STATE shall Disclose Protected Information to COUNTY only as authorized by law to COUNTY.

B. STATE shall obtain any consents or authorizations that may be necessary for it to Disclose Protected Information with COUNTY.

C. STATE shall notify COUNTY of any limitations that apply to STATE's Use and Disclosure of Protected Information—including any restrictions on certain Disclosures of Protected Health Information requested under 45 C.F.R. § 164.522, "Rights to Request Privacy Protection for Protected Health Information," subpart (a), to which STATE has agreed and that would also limit the Use or Disclosure of Protected Information by COUNTY.

D. STATE shall refrain from requesting COUNTY to Use or Disclose Protected Information in a manner that would violate applicable law or would be impermissible if the Use or Disclosure were performed by STATE.

**2.6 Obligations of COUNTY Upon Expiration or Cancellation of the Contract.** Upon expiration or termination of the Contract for any reason:

A. In compliance with the procedures found in the Applicable Safeguards listed in subsection 2.1.A, or as otherwise required by applicable industry standards, or directed by STATE, COUNTY shall immediately destroy or sanitize (permanently de-identify without the possibility of re-identification), or return in a secure manner to STATE all Protected Information that it still maintains.

B. COUNTY shall ensure and document that the same action is taken for all Protected Information shared by STATE that may be in the possession of its Agents. COUNTY and its Agents shall not retain copies of any Protected Information.

C. In the event that COUNTY determines that returning or destroying the Protected Information is not feasible or would interfere with its ability to carry out its legal responsibilities, maintain appropriate safeguards, and/or comply with Subpart C of 45 C.F.R. Part 164, it shall notify STATE of the specific laws, rules, policies, or other circumstances that make return or destruction not feasible or otherwise inadvisable. Upon mutual agreement of the Parties that return or destruction of Protected Information is not feasible or otherwise inadvisable, COUNTY will continue to extend the protections of the Contract and this Attachment to the Protected Information and take all measures possible to limit further Uses and Disclosures of the Protected Information for so long as it is maintained by COUNTY or its Agents.

D. COUNTY shall document and verify in a written report to STATE the disposition of Protected Information. The report shall include at a minimum the following information:

1. A description of all Protected Information that has been sanitized or destroyed, whether performed internally or by a service provider;

2. The method by which, and the date when, the Protected Data were destroyed, sanitized, or securely returned to STATE; and

3. The identity of organization name (if different than COUNTY), and name, address, and phone number, and signature of Individual, that performed the activities required by this Section.

E. Documentation required by this Section shall be made available upon demand by STATE.

F. Any costs incurred by COUNTY in fulfilling its obligations under this Section will be the sole responsibility of COUNTY.

## 3. INSURANCE REQUIREMENTS

**3.1 Network Security and Privacy Liability Insurance.** COUNTY shall, at all times during the term of the Contract, keep in force a network security and privacy liability insurance policy. The coverage may be endorsed on another form of liability coverage or written on a standalone policy.

COUNTY shall maintain insurance to cover claims which may arise from failure of COUNTY's security or privacy practices resulting in, but not limited to, computer attacks, unauthorized access, Disclosure of not public data including but not limited to confidential or private information or Protected Health Information, transmission of a computer virus, or denial of service.

**4. INTERPRETATION**

4.1 Any ambiguity in this Agreement shall be interpreted to permit compliance with all Applicable Safeguards.

**REMAINDER OF PAGE INTENTIONALLY LEFT BLANK.**

# POLK COUNTY SOCIAL SERVICES

612 North Broadway, Room 302, Crookston, MN 56716-1452
Phone (218) 281-3127 * Fax (218) 281-3926
Toll Free (877) 281-3127
www.co.polk.mn.us


**DATE:** October 6, 2020

**TO:** Polk County Board of Commissioners

**FROM:** Karen Warmack, Director

**AGENDA ITEM:** Office Support Specialist Replacement Request

**SUMMARY:** Replacement of an Office Support Specialist position based in the East Grand Forks Office.

**ACTION REQUESTED: (MOTION)**

Board approval to refill one Office Support Specialist position, and any internal subsequent position vacancies occurring because of this action.

# POLK COUNTY SOCIAL SERVICES

612 North Broadway, Room 302, Crookston, MN 56716-1452
Phone (218) 281-3127 * Fax (218) 281-3926
Toll Free (877) 281-3127
www.co.polk.mn.us


**DATE:** October 6, 2020

**TO:** Polk County Board of Commissioners

**FROM:** Karen Warmack, Director

**AGENDA ITEM:** Resolution (2020-81) Accepting & Distributing Holiday Gifts

1. Many organizations throughout the area request Polk County Social Services assist them in distributing holiday gifts to needy families. Gifts will be accepted and distributed between 11/1/2020 and 12/31/2020.

**ACTION REQUESTED: (MOTION)**

Approve Resolution (2020-81) Accepting and Distributing Holiday Gifts

RESOLUTION OF THE POLK COUNTY
BOARD OF COMMISSIONERS

**Accepting And Distributing Holiday Gifts**

**RESOLUTION (2020-81)**

The following resolution (2019-81) was offered by Commissioner:

WHEREAS, Many organizations throughout the area request Polk County Social Services assist them in distributing holiday gifts to needy families.

NOW THEREFORE BE IT RESOLVED, By the County Board of Polk County, Minnesota to accept and distribute holiday gifts for the period of 11/1/20 – 12/31/20 received to Polk County Social Services from various organizations.

Commissioner seconded the foregoing resolution and it was declared adopted upon the following vote. YEAS: NAYS:

STATE OF MINNESOTA )
) ss
COUNTY OF POLK )

I, Charles S. Whiting, County Administrator to and Clerk of the Polk County Board of Commissioners do hereby certify that I have compared the foregoing resolution with the original resolution filed in my office on the 6th day of October, 2020, and that the same is a true and correct copy of the whole thereof.

WITNESS my hand and Official Seal of Polk County at Crookston, Minnesota this 6th day of October 2020.

_____
Charles S. Whiting, County Administrator
Clerk of the Board

# POLK COUNTY SOCIAL SERVICES

612 North Broadway, Room 302, Crookston, MN 56716-1452
Phone (218) 281-3127 * Fax (218) 281-3926
Toll Free (877) 281-3127
www.co.polk.mn.us


**DATE:** October 6, 2020

**TO:** Polk County Board of Commissioners

**FROM:** Karen Warmack, Director

**AGENDA ITEM:** Resolution (2020-82) Accepting Financial Contribution On Behalf Of Polk County Social Services from East Grand Forks, VFW


**SUMMARY:** VFW in East Grand Forks made a contribution of $100.00 to Polk County Social Services for the purpose of supporting supplies for the foster care supervised visitation room in East Grand Forks.


**ACTION REQUESTED: (MOTION)**

Approve Resolution (2020-82) Accepting Financial Contribution On Behalf Of Polk County Social Services from East Grand Forks, VFW

RESOLUTION OF THE POLK COUNTY
BOARD OF COMMISSIONERS

**Resolution Accepting Financial Contribution On Behalf Of Polk County Social Services From East Grand Forks VFW**

**RESOLUTION (2020-82)**

The following resolution (2020-82) was offered by Commissioner:

WHEREAS, The VFW located in East Grand Forks, MN, has made a financial contribution of $100.00 for the purpose of supporting supplies for the foster care supervised visitation room in East Grand Forks, MN, and;

WHEREAS, Polk County Social Services wishes to have the Polk County Board formally accept this financial donation.

NOW THEREFORE BE IT RESOLVED, By the County Board of Polk County, Minnesota as follows:

> The financial contribution from the VFW, East Grand Forks, MN, hereby is accepted by the Polk County Board of Commissioners on behalf of Polk County Social Services for the purpose of supporting supplies for the foster care supervised visitation room in East Grand Forks, MN.

Commissioner seconded the foregoing resolution and it was declared adopted upon the following vote. YEAS: NAYS:

STATE OF MINNESOTA )
) ss
COUNTY OF POLK )

I, Charles S. Whiting, County Administrator to and Clerk of the Polk County Board of Commissioners do hereby certify that I have compared the foregoing resolution with the original resolution filed in my office on the 6th day of October, 2020, and that the same is a true and correct copy of the whole thereof.

WITNESS my hand and Official Seal of Polk County at Crookston, Minnesota this 6th day of October 2020.

_____
Charles S. Whiting
County Administrator
Clerk of the Board

# Board of Commissioners

Polk County Government Center
612 N Broadway – Room 211
Crookston, MN 56716-1452

**TO:** POLK COUNTY BOARD OF COMMISSIONERS

**FROM:** Sheriff James Tadman

**MEETING DATE:** October 6, 2020

**AGENDA ITEM:**

1. Polk County Sheriff's Office received a request for old Emergency Equipment.
2. Resolution (2020-80) Accepting Financial Donations On Behalf Of Polk County Sheriff's Office From Crookston Welding

**SUMMARY:**

1. Crookston Firefighter's Association requested a donation of emergency light bar and control box.

2. Polk County Sheriff's Office received a $500.00 donation from Crookston Welding to be used for K9 Program.

**ACTION REQUESTED:**

1. Motion and approve Donation of light bar and control box.
2. Approve Resolution (2020-80) Accepting Financial Donations On Behalf Of Polk County Sheriff's Office From Crookston Welding

**CROOKSTON FIREFIGHTER'S ASSOCIATION**

620 S. Main Street • Crookston, MN 56716 • 281-4584

Polk County Sheriff's Office

9/25/2020

The Crookston Firefighters Association would like to make a request for the donation of an emergency light bar and control box. We are trying to replace the light bar that is on one of our wildland fire engines that is unable to be repaired.

Respectfully Submitted,

Derek Brekken
Lieutenant
Crookston Firefighters Association

RESOLUTION OF THE POLK COUNTY
BOARD OF COMMISSIONERS

**Resolution Accepting Financial Donations On Behalf Of Polk County Sheriff's Office From Crookston Welding**

**RESOLUTION (2020-80)**

The following resolution (2020-80) was offered by Commissioner:

WHEREAS, Crookston Welding, located in Crookston, Minnesota, has made a financial donation of $500.00 to support the Polk County Sheriff's Office, K9 Program; and

WHEREAS, Polk County K9 Program, which is part of the Polk County Sheriff's Office, wishes to have the County Board formally accept these financial donations on behalf of Polk County K9 Program.

NOW THEREFORE BE IT RESOLVED, By the County Board of Polk County, Minnesota as follows:

1. The financial donations from Crookston Welding, which are listed above, hereby are accepted by the Polk County Board of Commissioners on behalf of Polk County Sheriff's Office to be used in support of the services provided by Polk County K9 Program.

Commissioner seconded the foregoing resolution and it was declared adopted upon the following vote. YEAS: NAYS:

STATE OF MINNESOTA )
) ss
COUNTY OF POLK )

I, Charles S. Whiting, County Administrator to and Clerk of the Polk County Board of Commissioners do hereby certify that I have compared the foregoing resolution with the original resolution filed in my office on the 6th day of October, 2020, and that the same is a true and correct copy of the whole thereof.

WITNESS my hand and Official Seal of Polk County at Crookston, Minnesota this 6th day of October 2020.

_____
Charles S. Whiting, County Administrator
Clerk of the Board

# Board of Commissioners

Polk County Government Center
612 N Broadway – Room 211
Crookston, MN 56716-1452

**TO:** POLK COUNTY BOARD OF COMMISSIONERS

**FROM:** Sheriff James Tadman

**MEETING DATE:** October 6, 2020

**AGENDA ITEM:**

1. Approval to hire a Transport Deputy position

**SUMMARY:**

1. Received a two-week notice from a Transport Deputy. Would like permission to start hiring process for a Transport Deputy position.

**ACTION REQUESTED:**

1. Motion and approve hiring for a Transport Deputy position due to a resignation.

# Board of Commissioners

Polk County Government Center
612 N Broadway – Room 211
Crookston, MN 56716-1452

**TO:** POLK COUNTY BOARD OF COMMISSIONERS
CHUCK WHITING, POLK COUNTY ADMIN.

**FROM:** JACOB SNYDER PLANNING & ZONING ADMIN.

**MEETING DATE:** October 6, 2020

**AGENDA ITEM:** Conditional Use Permit – Steve & Tammy Larson (#74.00796.00)

**SUMMARY:**

1) Applicant is requesting a Conditional Use Permit (CUP) to hook a new septic system to a new accessory structure on a non-riparian lot on Maple Lake. PCZO 18.2225 E states: No septic systems installed for use in an accessory structure without a CUP.

2) Applicant owns a riparian and non-riparian lot on Maple Lake. The total non-riparian lot (backlot) size is 50' x 130' approx. 6,500 square feet. Planning & Zoning has received a land use permit application for construction of a 30' x 50' (1500 sq ft) shed in the summer of this year.

3) The applicant's proposing to have a bathroom in this proposed shed and noted on the application that there will be no bedrooms or will not function as guest house. The applicant would like to connect the new structure to the planned septic system for upgrading the cabin septic system as well. We have received a septic design for the proposed septic system, and it is planned to meet all setback requirements.

4) The new shed and septic system will meet all applicable setbacks. Lots impervious surface coverage with the shed and small concrete apron would be 1,600 sq feet or 24.5% of allowable coverage. Stormwater rules state that 25% impervious or under is allowed on any parcel. The applicant will be required to complete and record a no guesthouse waiver before the building permit is issued.

5) Stephanie Klamm DNR Area Hydrologist stated that the primary reason for shore land controls is to protect water quality by retaining vegetation and riparian habitat. Shore land regulations seek to minimize erosion and sedimentation into public waters by limiting density and impervious surfaces. She adds if the County approves this application, the DNR would recommend the following conditions;
   a) No living/sleeping quarters or kitchen facilities shall be added to the accessory structure in the future.
   b) The accessory structure needs to be setback 300 feet from the OHWL of Maple Lake or reduced in size to meet all the setback requirements of the Polk County Shore land Ordinance.
   c) The accessory structure at 1,500 sq ft needs to be setback 300 feet from the OHWL or located on a backlot or reduced in size to meet all the setback requirements of the Polk County shoreland ordinance..
   d) Future buildings on the parcel meet all setbacks, height restrictions and impervious surface coverage of 25%, this may mean that future projects only allow pervious pavers.
   e) Vegetative screening between the structure and the OHWL is established satisfactory of the Polk County Planning and Zoning Office.
   f) Any bare ground be planted with perennial vegetation, preferably natural vegetation.

7) The Planning Commission/Staff recommends approval of the CUP with several conditions.

**ACTION REQUESTED:** (INFORMATION ONLY/MOTION/RESOLUTION)

1) Resolution to approve/deny the CUP request of Steve & Tammy Larson to install a new septic system to an accessory structure on a non-riparian lot on Maple Lake.

# BOARD OF COUNTY COMMISSIONERS

## Steve & Tammy Larson
## #74.00796.00
## October 6, 2020

**APPLICANT REQUEST:**

Applicant is requesting a Conditional Use Permit (CUP) to tie a new accessory building to a new septic system on a backlot on Maple Lake.

**ZONING ORDINANCE REQUIREMENTS:**

PCZO 18.2225 E states: No septic systems installed for use in an accessory structure without a CUP.

**PERTINENT FACTS:**

1) Applicant owns a riparian and non-riparian lot on Maple Lake.

2) The total non-riparian lot (backlot) size is 50' x 130' approx. 6,500 square feet.

3) Planning & Zoning has received a land use permit application for construction of a 30' x 50' (1500 sq ft) shed in the summer of this year.

4) The applicant's proposing to have a bathroom in this proposed shed and noted on the application that there will be no bedrooms or will not function as guest house.

5) The applicant would like to connect the new structure to the planned septic system for upgrading the cabin septic system as well. We have received a septic design for the proposed septic system, and it is planned to meet all setback requirements.

6) The new shed and septic system will meet all applicable setbacks. Lots impervious surface coverage with the shed and small concrete apron would be 1,600 sq feet or 24.5% of allowable coverage. Stormwater rules state that 25% impervious or under is allowed on any parcel.

7) The applicant will be required to complete and record a no guesthouse waiver before the building permit is issued.

**COMMENTS RECEIVED:**

1. Stephanie Klamm DNR Area Hydrologist stated that the primary reason for shore land controls is to protect water quality by retaining vegetation and riparian habitat. Shore land regulations seek to minimize erosion and sedimentation into public waters by limiting density and impervious surfaces. She adds if the County approves this application, the DNR would recommend the following conditions;

a) No living/sleeping quarters or kitchen facilities shall be added to the accessory structure in the future.
b) The accessory structure needs to be setback 300 feet from the OHWL of Maple Lake or reduced in size to meet all the setback requirements of the Polk County Shore land Ordinance.
c) The accessory structure at 1,500 sq ft needs to be setback 300 feet from the OHWL or located on a backlot or reduced in size to meet all the setback requirements of the Polk County shoreland ordinance..
d) Future buildings on the parcel meet all setbacks, height restrictions and impervious surface coverage of 25%, this may mean that future projects only allow pervious pavers.
e) Vegetative screening between the structure and the OHWL is established satisfactory of the Polk County Planning and Zoning Office.
f) Any bare ground be planted with perennial vegetation, preferably natural vegetation.

2. Maple Lake Improvement District had no issues with the request.

**PLANNING COMMISSION & STAFF RECOMMENDATION:**

Planning Commission & Staff recommends approval of the CUP with the following conditions:

1) No guest house uses – applicant shall have furnished evidence of having recorded the signed guest house waiver with the property deed before the building permit is issued.

2) No future development shall be allowed on the lot that would exceed the 25% impervious surface requirement. (This shall include sidewalks, patios, pavers, etc.)

3) The conditional use permit shall become void one year after it was granted unless used.

4) That the conditional use will not be injurious to the use and enjoyment of other property in the immediate vicinity for the purposes already permitted, nor substantially diminish or impair property values within the immediate vicinity.

5) That the establishment of the conditional use will not impede the normal and orderly development and improvement of surrounding vacant property for uses predominant in the area.

6) That adequate utilities, access roads, drainage and other necessary facilities have been or are being provided.

7) That adequate measures have been or will be taken to provide sufficient off-street parking and loading space to serve the proposed use.

8) That adequate measures have been or will be taken to prevent or control offensive odor, fumes, dust, noise and vibration, so that none of these will constitute a nuisance, and to control lighted signs and other lights in such a manner that no disturbance to neighboring properties will result.

9) That the use of the property shall at all times be in compliance with all Federal, State of Minnesota, and County of Polk rules and regulations.

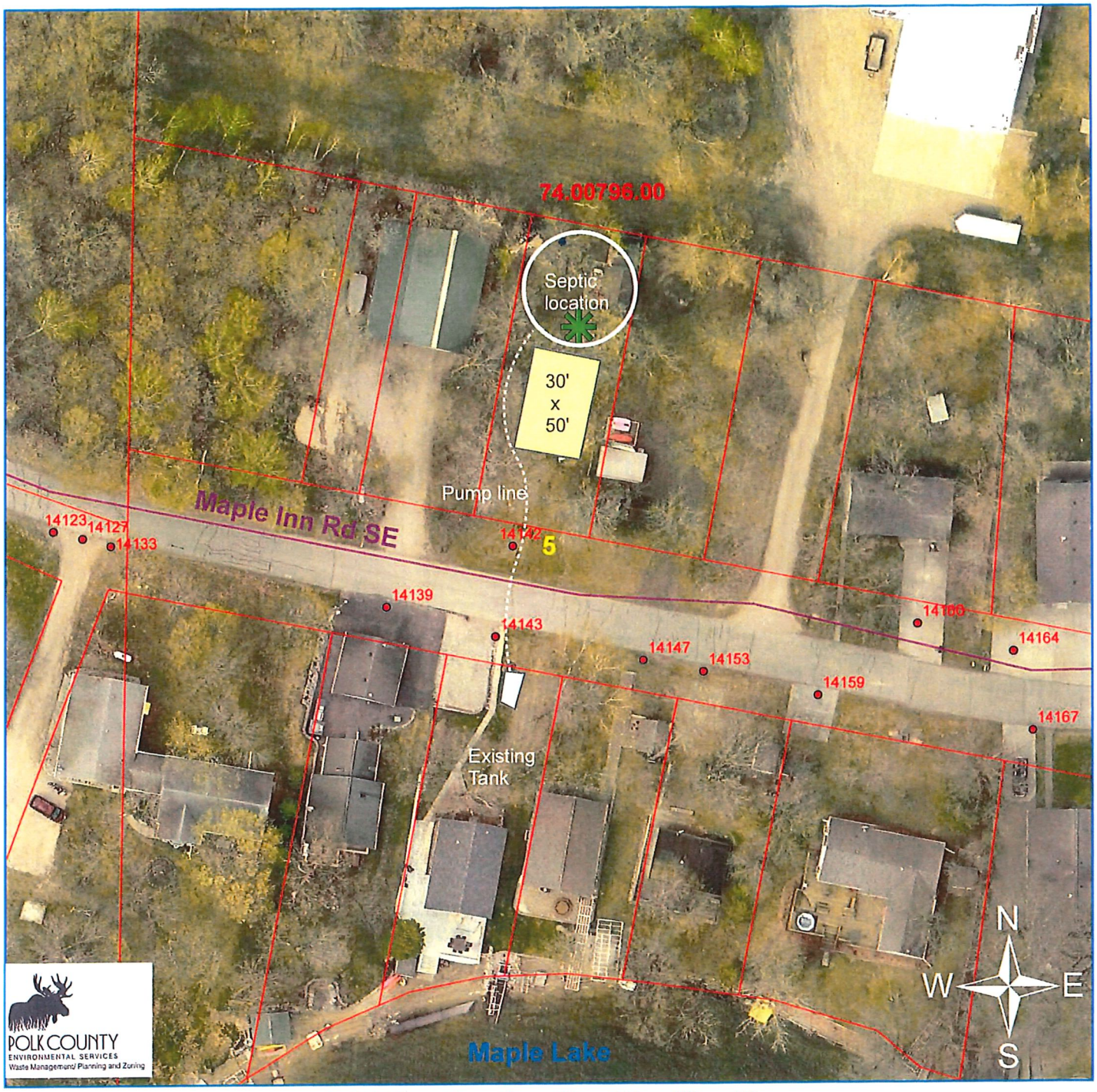


0 12.5 25 50 75 100 125 150 175 Feet

## Legend

- E911_Road
- Polk_GIS.DBO.Parcels
- Sections
- Indicates Project Location
- Proposed building to be tied to septic

*NOTE: Property is in the Shoreland Zoning District

**Conditional Use Permit Request: Applicant is requesting a CUP to tie a shed into a new septic system on a nonriparian lot (backlot) on Maple Lake. Location is parcel# 74.00796.00 address is 14143 Maple Inn Rd SE. Applicant listed on the application that the shed will have no living quarters to be a shed with bathroom.**

**Map Created 9/3/2020**
**By: Jacob Snyder**
**Planning & Zoning Admin.**

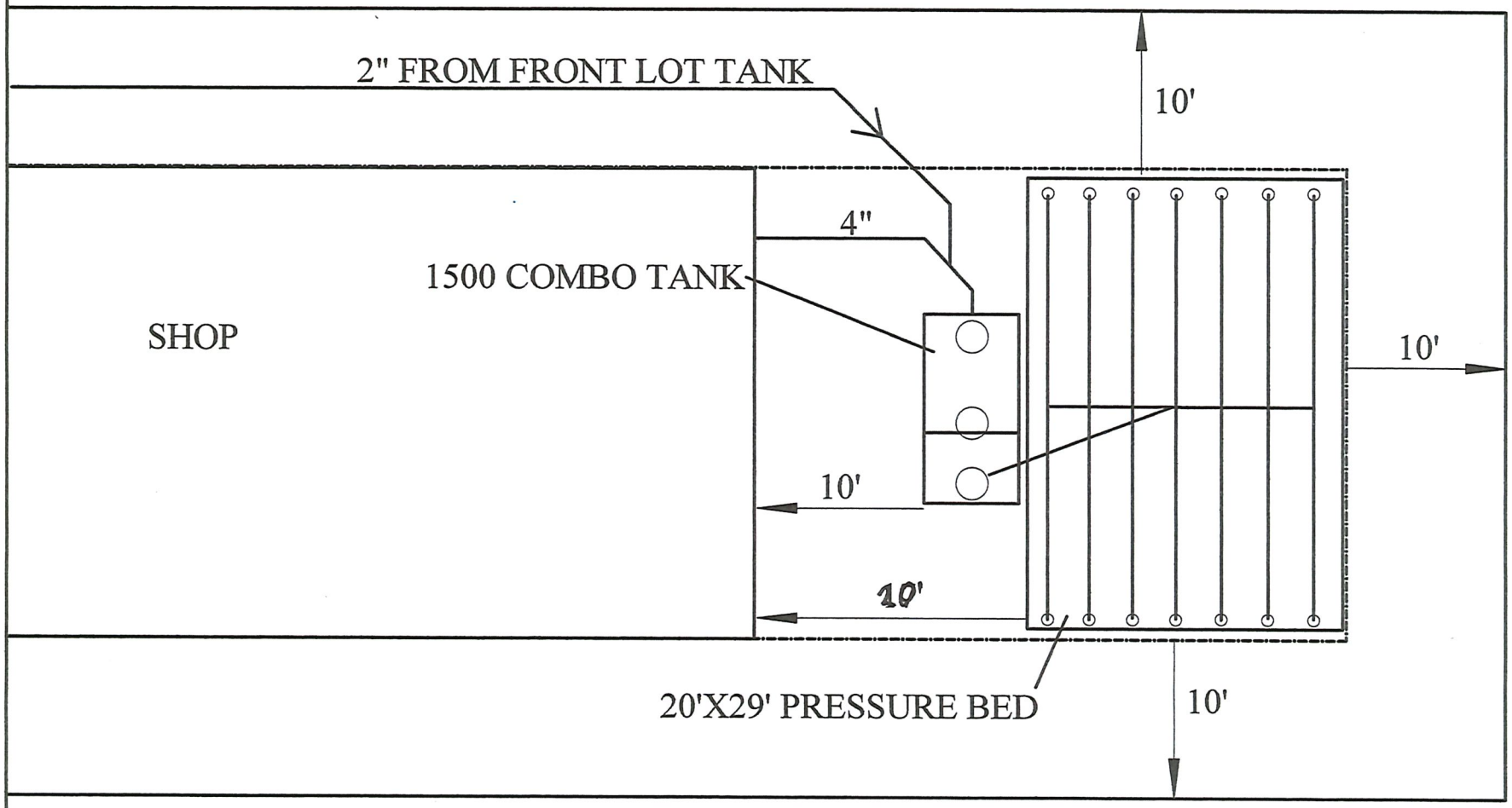


Date of Design: 8/5/2020 County: POLK

Project
Parcel ID: 74.00796.00
GPD: 450
System type:1
Shoreland:YES
Owner: STEVEN LARSON
Address:14143 MAPLE INN RD SE
MENTOR, MN 56736

Designer
Shawn Hedlund
MPCA license #2970

Hedlund Septic Design
235 Riverside Ave. NE
McIntosh, MN 56556
(218)791-4613
hedlundbackhoe1@gmail.com

RESOLUTION OF THE POLK COUNTY
BOARD OF COMMISSIONERS

**Conditional Use Permit For Steven & Tammy Larson**
**For Hooking A Septic System To An Accessory Structure**

**RESOLUTION (2020-83)**

The following resolution (2020-83) was offered by Commissioner:

WHEREAS, Polk County Zoning Ordinance, Section 18.225 E allows for an accessory structure to be hooked to a septic system in the Shore Land District; and

WHEREAS, Steven & Tammy Larson own land described as: Lot Three (3), Second Bliven Subdivision, according to the official plat thereof on file and of record in the Office of the County Recorder in and for the County of Polk and State of Minnesota, parcel #74.00796.00;

WHEREAS, Steven & Tammy Larson's plan meets all requirements of the Polk County Zoning Ordinances; and

WHEREAS, The Polk County Board of Commissioners finds:

1. The applicant owns a riparian and non-riparian lot on Maple Lake.

2. The total non-riparian (backlot) size is 50'x 130', approximately 6,500 square feet.

3. Planning and Zoning has received a land use permit application for construction of a 30' x 50' (1,500 sq. ft.) shed the summer of this year.

4. The applicant's proposing to have a bathroom in this proposed shed and noted on the application that there will be no bedrooms or will not function as guest house.

5. The applicant would like to connect the new structure to the planned septic system for upgrading the cabin septic system as well. We have received the septic design for the proposed septic system, and it is planned to meet all setback requirements.

6. The new shed and septic system will meet all applicable setbacks. Lots impervious surface coverage with the shed and small concrete apron would be 1,600 sq. feet or 24.5% of allowable coverage. Stormwater rules stated that 25% impervious or under is allowed on any parcel.

7. The applicant will be required to complete and record a no guesthouse waiver before the land use permit is issued for this request.

8. Stephanie Klamm, MN DNR, stated that if the county approves the request, they would recommend the following conditions:

   a. No living/sleeping quarters or kitchen facilities shall be added to the accessory structure in the future.

   b. The accessory structure at 1,500 sq. ft. needs to be setback 300 feet from the OHWL or located on a backlot of Maple Lake or reduced in size to meet all the setback requirements of the Polk County Shore Land Ordinance.

   c. The accessory structure meets the height restrictions for riparian parcels.

   d. Future buildings on the parcel meet all setbacks, height restrictions and impervious surface coverage of 25%, this may mean that future projects only allow pervious pavers.

   e. Vegetative screening between the structure and the OHWL is established satisfactory of the Polk County Planning and Zoning Office.

   f. Any bare ground be planted with perennial vegetation, preferably natural vegetation.

9. The proposed use is a conditional use expressly designated in the ordinance; and,

10. That the conditional use will not be injurious to the use and enjoyment of other property in the immediate vicinity for the purposes already permitted, nor substantially diminish and impair property values within the immediate vicinity.

11. That the establishment of the conditional use will not impede the normal and orderly development and improvement of surrounding vacant property for uses predominant in the area.

12. That adequate utilities, access roads, drainage and other necessary facilities have been or are being provided.

13. That adequate measures have been or will be taken to provide sufficient off-street parking and loading space to serve the proposed use.

14. That adequate measures have been or will be taken to prevent or control offensive odor, fumes, dust, noise and vibration, so that none of these will constitute a nuisance, and to control lighted signs and other lights in such a manner that no disturbance to neighboring properties will result.

NOW THEREFORE BE IT RESOLVED, That the Polk County Board of Commissioners grants a conditional use permit to Steve & Tammy Larson with the following conditions:

1. That the conditional use will not be injurious to the use and enjoyment of other property in the immediate vicinity for the purposes already permitted, nor substantially diminish and impair property values within the immediate vicinity.

2. That the establishment of the conditional use will not impede the normal and orderly development and improvement of surrounding vacant property for uses predominant in the area.

3. That adequate utilities, access roads, drainage and other necessary facilities have been or are being provided.

4. That adequate measures have been or will be taken to provide sufficient off-street parking and loading space to serve the proposed use.

5. That adequate measures have been or will be taken to prevent or control offensive odor, fumes, dust, noise and vibration, so that none of these will constitute a nuisance, and to control lighted signs and other lights in such a manner that no disturbance to neighboring properties will result.

6. That the use of the property shall at all times be in compliance with all federal, State of Minnesota, and County of Polk rules and regulations.

7. No guest house uses – applicant shall have furnished evidence of having recorded the signed guest house waiver with the property deed before the building permit is issued.

8. The conditional use permit shall become void one year after it was granted unless used.

9. No future development shall be allowed on the lot that would exceed the 25% impervious surface requirement. This shall include sidewalks, patios, pavers, etc..

Commissioner seconded the foregoing resolution and it was declared adopted upon the following vote. YEAS: NAYS:

STATE OF MINNESOTA )
) ss
COUNTY OF POLK )

I, Charles S. Whiting, County Administrator to and Clerk of the Polk County Board of Commissioners do hereby certify that I have compared the foregoing resolution with the original resolution filed in my office on the 6th day of October 2020, and that the same is a true and correct copy of the whole thereof.

WITNESS my hand and Official Seal of Polk County at Crookston, Minnesota this 6th day of October 2020.

_____

Charles S. Whiting
County Administrator
Clerk of the Board

# Board of Commissioners

Polk County Government Center
612 N Broadway – Room 211
Crookston, MN 56716-1452

**TO:** POLK COUNTY BOARD OF COMMISSIONERS
CHUCK WHITING, POLK COUNTY ADMIN.

**FROM:** Jacob Snyder - Planning & Zoning Administrator

**MEETING DATE:** October 6, 2020

**AGENDA ITEM:** Conditional Use Permit –Neal Kauffman Jr. (Parcel #28.00297.00)

**SUMMARY:**

1) Applicant is requesting a Conditional Use Permit (CUP) to operate a sawmill out of a 40' x 56' with 30' x 40' (3,440 sq. ft.) accessory structure on a parcel of land located in the Agricultural & Shoreland Zoning Districts in section 36 of Garfield Township..
2) The applicant wishes to expand operations of a small sawmill to produce lumber made from locally sourced wood on a 40-acre parcel of land in the Agricultural & Shoreland Zoning Districts in Section 36 of Garfield Township.
3) The applicant proposes to construct a 40' x 56' with 30' x 40' lean to sawmill with the total dimensions equaling 3,440 sq ft. This will be the dimensions after reconstructing the existing building, utilizing the existing concrete slab.
4) This operation has been based out of a 30' x 40' sawmill shed that was permitted in 2014. The use at that time did not required special permitting but this expansion does require a CUP as the building addition exceeds the home occupation standards. PCZO 12.3048 states home occupation standards operated out of an accessory building less than 1,800 sq ft can be permitted through an Interim Use permit. Those that exceed that sq. ft. need a CUP. No prior interim use permit was established for this operation on this site.
5) The applicant has submitted an operation plan for the business and has been made aware of zoning requirements. The additional square footage would allow the applicants to better process wood during the winter months.
6) The structure would process lumber from locally sourced wood out of the Red Lake area as well as White Earth area. Both sources are within 100 miles from the mill.
7) The applicant stated operations on the site are sporadic they rarely operate 5 days a week, or over 30 hours a week. Currently 3 employees all who live on the site and work to process the lumber. No additional employees will be added to this operation. Freight will come 1-3 times a month to pick up or deliver logs to process as well as pick up lumber to go to market.
8) The sawdust from the operation is used for animal bedding on the site. The applicant has plans to use a bunker or grain bin as saw dust storage for the operation until the it can be used for animal bedding.
9) To avoid fires they clean up sawdust debris so not to accumulate large amounts and if needed there is a phone in the area to mitigate fire, and alert emergency services to the area.
10) George Zocher, neighbor contacted our office via phone to voice his support of the operation on this site.
11) Planning Commission as well as P&Z Staff recommends approval of the Conditional Use Permit request with several conditions.

## ACTION REQUESTED: (INFORMATION ONLY/MOTION/RESOLUTION)

Resolution to approve/deny the CUP request of Neal Kauffman Jr to operate a sawmill in section 36 of Garfield Township with Planning Commission recommendations.

# BOARD OF COUNTY COMMISSIONERS

## Neal Kauffman Jr.
## 28.00297.00
## October 6, 2020

**APPLICANT REQUEST:**

Applicant is requesting a Conditional Use Permit (CUP) to operate a sawmill out of a 40' x 56' with 30' x 40' (3,440 sq. ft.) accessory structure on a parcel of land located in the Agricultural & Shoreland Zoning Districts in section 36 of Garfield Township.

**ZONING ORDINANCE REQUIREMENTS:**

1) PCZO Section 13.7003 states: Farm-related Businesses. Business directly related to the conduct of commercial agriculture provided the following criteria are met:

   a. The business is 70% farm-related under 1 or more of the following criteria:
      1. The business provides a repair or maintenance service for equipment necessary to agricultural operations, or;
      2. **The business produces a product or involves a process that utilizes locally grown or produced commodities,** or;
      3. The business involves sales and/or purchasing of products of the local agricultural economy or of goods unique and necessary to agricultural operations.
   b. Sewage can be treated by a conforming on-site sewage system.
   c. The business is of a scale that the demand for support services such as sewer, water, police, fire protection, roads or streets, can be accommodated within the context of the service levels available in the agricultural area.
   d. The business is operated in conformance with the conditions of an approved plan of operation and the applicable provisions of Section 12.

2) PCZO Section 13.7020 states; An accessory structure not used in conjunction with a home occupation that does not comply with 13.4240, or where the use of the accessory structure is in conjunction with a home occupation but does not meet one or more criteria listed in 13.4300 – 13.4310, may be allowed provided that:
   a. The applicant complies with those criteria listed in 13.4300 – 13.4310, or has satisfactorily addressed any of those requirements for which they are unable to comply; and
   b. There is a demonstrated need to use the accessory structure as a part of the home occupation.
   c. If the use of the accessory structure is for storage of equipment or materials to be used off site, the use of the accessory structure shall not require a Conditional Use Permit, provided the use is in conformance with 13.4300

3) PCZO section 13.4309 states: Any home occupation use that does not comply with one or more of the aforementioned conditions shall be required to obtain a Conditional Use Permit as prescribed in 13.7020.

**PERTINENT FACTS:**

1) The applicant wishes to expand operations of a small sawmill to produce lumber made from locally sourced wood on a 40-acre parcel of land in the Agricultural & Shoreland Zoning Districts in Section 36 of Garfield Township.

2) The applicant proposes to construct a 40' x 56' with 30' x 40' lean to sawmill with the total dimensions equaling 3,440 sq ft. This will be the dimensions after reconstructing the existing building, utilizing the existing concrete slab.

3) This operation has been based out of a 30' x 40' sawmill shed that was permitted in 2014. The use at that time did not required special permitting but this expansion does require a CUP as the building addition exceeds the home occupation standards. PCZO 12.3048 states home occupation standards operated out of an accessory building less than 1,800 sq ft can be permitted through an Interim Use permit. Those that exceed that sq. ft. need a CUP.

4) No prior interim use permit was established for this operation on this site.

5) The applicant has submitted an operation plan for the business and has been made aware of zoning requirements. The additional square footage would allow the applicants to better process wood during the winter months.

6) The structure would process lumber from locally sourced wood out of the Red Lake area as well as White Earth area. Both sources are within 100 miles from the mill.

7) The applicant stated operations on the site are sporadic they rarely operate 5 days a week, or over 30 hours a week. Currently 3 employees all who live on the site and work to process the lumber. No additional employees will be added to this operation. Freight will come 1-3 times a month to pick up or deliver logs to process as well as pick up lumber to go to market.

8) The sawdust from the operation is used for animal bedding on the site. The applicant has plans to use a bunker or grain bin as saw dust storage for the operation until the it can be used for animal bedding.

9) To avoid fires they clean up sawdust debris so not to accumulate large amounts and if needed there is a phone in the area to mitigate fire, and alert emergency services to the area.

**COMMENTS RECEIVED:**

1) George Zocher, neighbor contacted our office via phone to voice his support of the operation on this site.

## PLANNING COMMISSION & STAFF RECOMMENDATION:

Planning Commission & Staff recommends approval of the CUP with the following conditions:

1) The operation shall remain in the scope of the original plan of operations any deviation from the plan of operations would trigger a new conditional use permit.

2) Site storage of rough-cut logs or lumber shall meet structural setbacks off property lines, over 15 feet and roadways, over 68 feet from the centerline of 450th ST SE.

3) There will be a limit of 150 cords of wood located within 200 feet of 450th ST SE the Township road accessing the site. Additional lumber more than 150 cords must be outside of 200 feet from the roadway.

4) Wood shall be locally sourced from Minnesota and incoming wood must be evaluated for invasive insects that could pose a threat to native timber. (Invasive timber species include but are not limited to Emerald Ash Borer, Hemlock Woolly Adelgid, and Asian Longhorned Beetle)

5) The conditional use permit shall become void one year after it was granted unless used.

6) That the conditional use will not be injurious to the use and enjoyment of other property in the immediate vicinity for the purposes already permitted, nor substantially diminish or impair property values within the immediate vicinity.

7) That the establishment of the conditional use will not impede the normal and orderly development and improvement of surrounding vacant property for uses predominant in the area.

8) That adequate utilities, access roads, drainage and other necessary facilities have been or are being provided.

9) That adequate measures have been or will be taken to provide sufficient off-street parking and loading space to serve the proposed use.

10) That adequate measures have been or will be taken to prevent or control offensive odor, fumes, dust, noise and vibration, so that none of these will constitute a nuisance, and to control lighted signs and other lights in such a manner that no disturbance to neighboring properties will result.

11) That the use of the property shall at all times be in compliance with all Federal, State of Minnesota, and County of Polk rules and regulations.

0 30 60 120 180 240 300 360 420 Feet

## Legend

- E911_Road
- Polk_GIS.DBO.Parcels
- Sections
- PWI Lakes and Wetlands
- Indicates Project Location
- Proposed building addition

*NOTE: Property is in the Agricultural & Shoreland Zoning District (Raff Lake)

**Conditional Use Permit Request: Applicant is requesting a CUP to expand sawmill operations on parcel# 28.00297.00 to add additional building space for total footprints of 40'x56' plus a 40'x30' lean-to building. The operations of the site would be similar to exisitng uses but allow the operations to commence during cold winter conditions.**

**Map Created 9/3/2020**
**By: Jacob Snyder**
**Planning & Zoning Admin.**

# Operational Plan:

RECEIVED
AUG 21 2020
POLK COUNTY ENV. SVS.

(1) We have no schedule on our sawmill operation. We also milk cows, farm + grow produce. ~~The~~ We saw as we get to it. Sometimes we saw nothing for a wk or 2 then sometimes we saw 3 days all day. We rarely saw 5 days a wk. or over 30 hrs. a wk.

(2) The maximum no of people working ~~on~~ at the mill is 3

(3) Ear plugs + used as necessary + shields over turning shafts + belts as needed

(4) Log trucks + lumber trucks.

(5) To avoid fires, we ~~th~~ keep debris away from stove + replace bearings if they get hot. We would call 911 if a fire got out of control.

Additional notes:

* Sawdust will be outsourced + used on the site for animal bedding not to accumulate in piles. Sawdust is planned to be used as fast as it is produced from the operations.
* Mufflers will be reconfigured to muffle the noise from the operations.
* No additional employees are going to be added to this operation

RESOLUTION OF THE POLK COUNTY
BOARD OF COMMISSIONERS

**Conditional Use Permit For Neal Kauffmann Jr.**
**For Hooking A Septic System To An Accessory Structure**

**RESOLUTION (2020-84)**

The following resolution (2020-84) was offered by Commissioner:

WHEREAS, Polk County Zoning Ordinance, Section 13.4309 allows for operation of a sawmill in the Agricultural District; and

WHEREAS, Neal Kauffman, Jr. owns land described as: The Northwest Quarter of the Northwest Quarter (NW¼NW¼), Section 36, Township 147 North of Range 44 West of the Fifth Principal Meridian in Polk County, Minnesota, parcel #28.00297.00;

WHEREAS, Neal Kauffman Jr's plan meets all requirements of the Polk County Zoning Ordinances; and

WHEREAS, The Polk County Board of Commissioners finds:

1. The applicant wishes to expand operations of a small sawmill to produce lumber made from locally sourced wood on a 40-acre parcel of land in the Agricultural & Shore Land Zoning Districts in Section 36 of Garfield Township.

2. The applicant proposes to construct a 40' x 56' with 30' x 40' lean to sawmill with the total dimensions equaling 3,440 sq. ft. This will be the dimensions after reconstructing the existing building, utilizing the existing concrete slab.

3. This operation has been based out of a 30' x 40' sawmill shed that was permitted in 2014. The use at that time did not require special permitting but this expansion does require a CUP as the building addition exceeds the home occupation standards. PCZO 12.3048 states home occupation standards operated out of an accessory building less than 1,800 sq. ft. can be permitted through an Interim Use Permit. Those that exceed that sq. ft. need a CUP.

4. No prior interim use permit was established for this operation on this site.

5. The applicant has submitted an operation plan for the business and has been made aware of zoning requirements. The additional square footage would allow the applicants to better process wood during the winter months.

6. The structure would process lumber from locally sourced wood out of the Red Lake area as well as White Earth area. Both sources are within 100 miles from the mill.

7. The applicant stated operations on the site are sporadic as they rarely operate 5 days a week or over 30 hours a week. Currently 3 employees all who live on the site and work to process the lumber. No additional employees will be added to this operation. Freight will come 1-3 times a month to pick up or deliver logs to process as well as pick up lumber to go to market.

8. The sawdust from the operation is used for animal bedding on the site. The applicant has plans to use a bunker or grain bin as sawdust storage for the operation until it can be used for animal bedding.

9. To avoid fires they clean up sawdust debris so not to accumulate large amounts and if needed there is a phone in the area to mitigate fire and alert emergency services to the area.

10. The proposed use is a conditional use expressly designated in the ordinance; and,

11. That the conditional use will not be injurious to the use and enjoyment of other property in the immediate vicinity for the purposes already permitted, nor substantially diminish and impair property values within the immediate vicinity.

12. That the establishment of the conditional use will not impede the normal and orderly development and improvement of surrounding vacant property for uses predominant in the area.

13. That adequate utilities, access roads, drainage and other necessary facilities have been or are being provided.

14. That adequate measures have been or will be taken to provide sufficient off-street parking and loading space to serve the proposed use.

15. That adequate measures have been or will be taken to prevent or control offensive odor, fumes, dust, noise and vibration, so that none of these will constitute a nuisance, and to control lighted signs and other lights in such a manner that no disturbance to neighboring properties will result.

NOW THEREFORE BE IT RESOLVED, That the Polk County Board of Commissioners grants a conditional use permit to Neal Kauffman Jr. with the following conditions:

1. That the conditional use will not be injurious to the use and enjoyment of other property in the immediate vicinity for the purposes already permitted, nor substantially diminish and impair property values within the immediate vicinity.

2. That the establishment of the conditional use will not impede the normal and orderly development and improvement of surrounding vacant property for uses predominant in the area.

3. That adequate utilities, access roads, drainage and other necessary facilities have been or are being provided.

4. That adequate measures have been or will be taken to provide sufficient off-street parking and loading space to serve the proposed use.

5. That adequate measures have been or will be taken to prevent or control offensive odor, fumes, dust, noise and vibration, so that none of these will constitute a nuisance, and to control lighted signs and other lights in such a manner that no disturbance to neighboring properties will result.

6. That the use of the property shall at all times be in compliance with all federal, State of Minnesota, and County of Polk rules and regulations.

7. The conditional use permit shall become void one year after it was granted unless used.

8. The operation shall remain in the scope of the original plan of operations. Any deviation from the plan of operations would trigger a new conditional use permit.

9. Site storage of rough-cut logs or lumber shall meet structural setbacks off property lines, over 15 feet and roadways, over 68 feet from the centerline of 450th St SE.

10. There will be a limit of 150-cords of wood located within 200 feet of 450th ST SE, the Township road accessing the site. Additional lumber more than 150 cords must be outside of 200 feet from the roadway.

11. Wood shall be locally sources from Minnesota and incoming wood must be evaluated for invasive insects that could pose a threat to native timer. Invasive timber species include but are not limited to Emerald Ash Borer, Hemlock Wooly Adelgid and Asian Longhorned Beetle.

Commissioner seconded the foregoing resolution and it was declared adopted upon the following vote. YEAS: NAYS:

STATE OF MINNESOTA )
) ss
COUNTY OF POLK )

I, Charles S. Whiting, County Administrator to and Clerk of the Polk County Board of Commissioners do hereby certify that I have compared the foregoing resolution with the original resolution filed in my office on the 6th day of October 2020, and that the same is a true and correct copy of the whole thereof.

WITNESS my hand and Official Seal of Polk County at Crookston, Minnesota this 6th day of October 2020.

_____

Charles S. Whiting
County Administrator
Clerk of the Board

# Board of Commissioners

Polk County Government Center
612 N Broadway – Room 211
Crookston, MN 56716-1452

**TO:** POLK COUNTY BOARD OF COMMISSIONERS
CHUCK WHITING, POLK COUNTY ADMIN.

**FROM:** JACOB SNYDER PLANNING & ZONING ADMIN.

**MEETING DATE:** October 6, 2020

**AGENDA ITEM:** Conditional Use Permit – Jeff Bakke (Parcel #74.00315.04)

**SUMMARY:**

1) The proposed request is to revoke the conditional use permit 2018-58 document #A000716972 at the landowners request so they can change the use of the shed to a dwelling which would include a 22'x40' dwelling space within the 40'x60' shed. As well the applicant would like to put a full septic system. *Note; no additional impervious surface will be added with the project as the project request is working within the existing structure.

2) In 2018 applicant requested a Conditional Use Permit (CUP) to tie an accessory building to an existing septic system (holding tank) on a non-riparian lot on Maple Lake in 2018, this CUP was approved with the following conditions;

   a) No guest house uses – applicant shall have furnished evidence of having recorded the signed guest house waiver with the property deed before the building permit is issued.
   b) Only the original camper permitted as a dwelling in 2012 shall be allowed on this parcel which meets all structural setbacks and section 18.2144 of PCZO.
   c) A septic compliance inspection is needed on the existing septic holding tank since the system is older than 5 years before issuing the permit.
   d) No future development shall be allowed on the lot that would exceed the 25% impervious surface requirement. (This shall include sidewalks, patios, pavers, etc.)

3) Applicant owns a non-riparian (backlot) lot on Maple Lake. The lot contained an old house on the backlot in 2009. The total non-riparian lot (backlot) size is 40,075 sq. ft. in size. In 2012 the applicant obtained a permit to bring a camper onto the lot as the dwelling and tied the camper to a holding tank.

4) The applicant has removed the camper previously permitted as a dwelling for the site. This parcel can only have one residential dwelling on it.

## ACTION REQUESTED: (INFORMATION ONLY/MOTION/RESOLUTION)

1) Resolution to Revoke the CUP 2018-58 Document #A000716972 at the request of the landowner, Jeff Bakke on a backlot on Maple Lake.

I am Stating my intent to have
Living Quarters in New shop House
at 14780 maple IWN Rd SE Mentor MN.
I no longer need a conditional use
permit. This building is a dwelling -
No longer a Camper on Site

Jeff Bakke 9-15-20

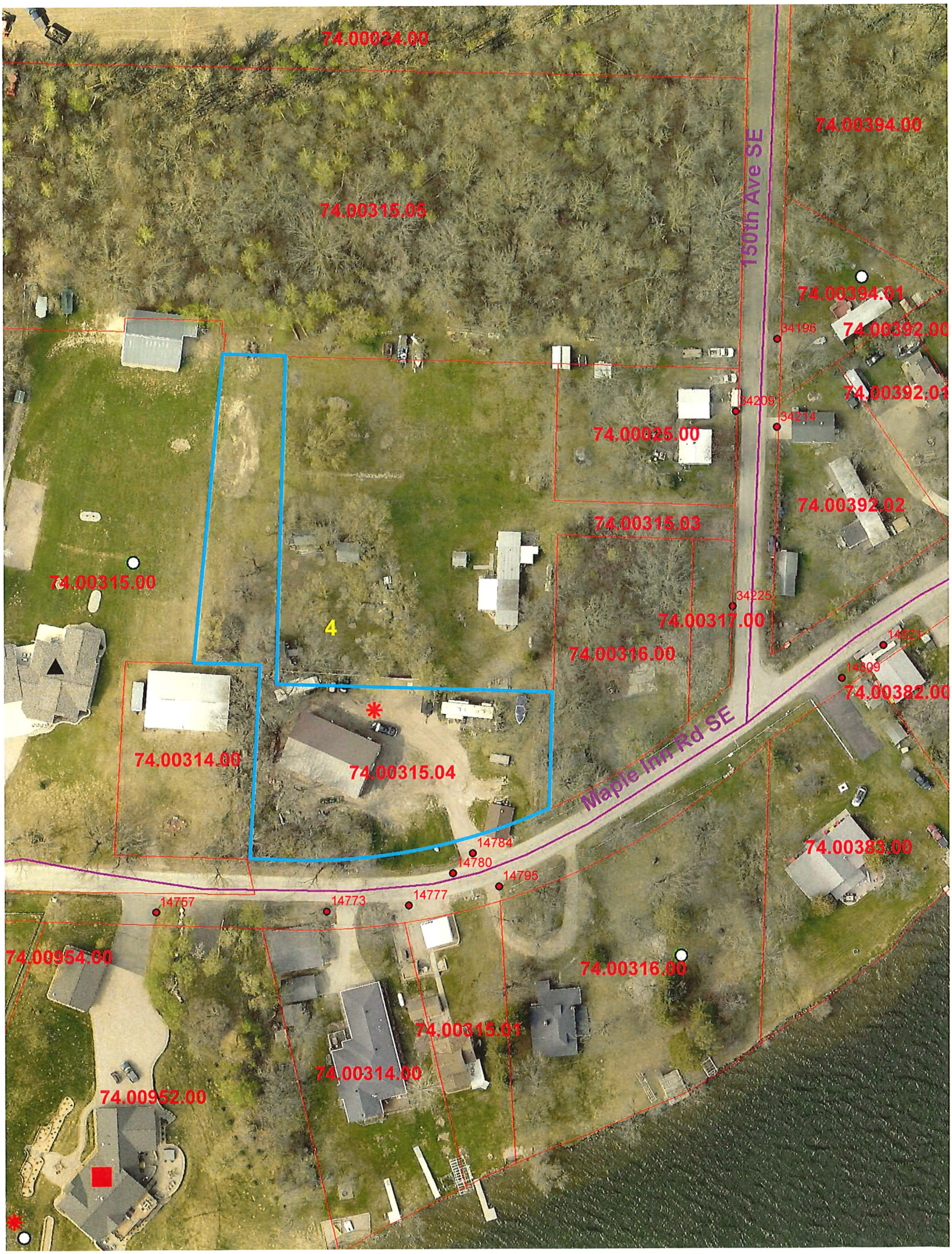
74.00024.00
74.00394.00
150th Ave SE
74.00315.05
74.00394.01
34196
74.00392.00
74.00392.01
34209
34214
74.00025.00
74.00392.02
74.00315.03
74.00315.00
34225
74.00317.00
4
74.00316.00
14821
14809
74.00382.00
74.00314.00
74.00315.04
Maple Inn Rd SE
14784
14780
14795
74.00383.00
14757
14773
14777
74.00954.00
74.00316.00
74.00315.01
74.00314.00
74.00952.00

RESOLUTION OF THE POLK COUNTY
BOARD OF COMMISSIONERS

**Revocation Of Recorded Resolution 2018-58**
**DOCUMENT A000716972 Recorded September 12, 2018**

**RESOLUTION (2020-85)**

WHEREAS, The following resolution (2020-85) was offered by Commissioner:

WHEREAS, A Conditional Use Permit was issued on August 28, 2018 in order to connect a septic system to an accessory structure, and

WHEREAS, A Guesthouse Restriction Agreement was signed and recorded with the property as Document Number A000716903, and

WHEREAS, Polk County Planning and Zoning has received a Land Use Permit to change the use off the accessory structure, issued in 2018, to a dwelling; and

WHEREAS, There currently is no residential dwelling on the property and the use of the accessory structure will be that of the primary residential dwelling on the property so that a Conditional Use Permit is no longer required; and

WHEREAS, All zoning setbacks and requirements have ben met to allow for the Land Use Permit for the proposed project to be issued.

NOW THEREFORE BE IT RESOLVED, That the Polk County Board of Commissioners revokes resolution 2018-58; and

BE IT FURTHER RESOLVED, That the Guesthouse Restriction Agreement, Document Number A000716903, shall also be revoked, and become null and void.

Commissioner seconded the foregoing resolution and it was declared adopted upon the following vote. YEAS: NAYS:

STATE OF MINNESOTA )
) ss
COUNTY OF POLK )

I, Charles S. Whiting, County Administrator to and Clerk of the Polk County Board of Commissioners do hereby certify that I have compared the foregoing resolution with the original resolution filed in my office on the 6th day of October 2020, and that the same is a true and correct copy of the whole thereof.

WITNESS my hand and Official Seal of Polk County at Crookston, Minnesota this 6th day of October 2020.

_____

Charles S. Whiting
County Administrator
Clerk of the Board

# Board of Commissioners

Polk County Government Center
612 N Broadway – Room 211
Crookston, MN 56716-1452

**TO:** POLK COUNTY BOARD OF COMMISSIONERS
CHUCK WHITING, POLK COUNTY ADMIN.

**FROM:** JACOB SNYDER – PLANNING & ZONING ADMIN.

**MEETING DATE:** October 6, 2020

**AGENDA ITEM:** Aquatic Invasive Species Project Request - ULSID

**SUMMARY:**

1) Union Lake Sarah Improvement District applied for funding from the Polk County Aquatic Invasive Species (AIS) Taskforce to purchase chemical to treat Eurasian Watermilfoil on Union Lake.

2) The taskforce budgeted $7,500 to be spent on special projects in 2019. The ULSID is planning to purchase $8007.24 in chemical which provides for two treatments on Union Lake. ULSID has requested that the AIS Taskforce contribute 75% ($6005.43) towards the purchase of chemical with ULSID contributing 25% ($2001.81) plus in-kind expenses ($2,000).

3) The Polk County AIS taskforce has not met since February 2020 due to COVID-19 pandemic. Since the request is over $5,000 final approval is requested from the County Board.

4) The Polk County AIS taskforce approved chemical funding in 2015, 2016, 2017, 2018, & 2019 so staff does not see why the taskforce would have any issue with funding this special project this year. A chemical sprayer and pontoon have also been purchased through AIS funding in 2015 and 2016 to apply the chemical and may be used by other lake improvement districts or the County to control other aquatic invasive species. Spraying the herbicide helps keep the weed mats down and so the potential for boaters to take milfoil with them to other lakes is limited.

5) The Union Lake Sarah Improvement District must get their spray plan approved by the MN DNR.

## ACTION REQUESTED: (INFORMATION ONLY/MOTION/RESOLUTION)

1) Motion to follow the recommendations of the Polk County AIS taskforce and award funding to the Union Lake Sarah Improvement District in the amount of $6,005.43 for the purchase of Amine 2,4D liquid herbicide to help control the Eurasian Watermilfoil on Union Lake.

# *Aquatic Invasive Species (AIS) Project Proposal Application*

**Applicant Information:** **Date:** ___

| | | | |
|---|---|---|---|
| Name: | Jodi Bachand | Organization: | ULSID |
| Mailing Address: | 20827 Pine Ridge Circle SE Erskine, MN 56535 | Phone: Email: | 218-280-7128 jodibachand@gmail.com |

**Project Information:**

| | |
|---|---|
| Project Title: | Union Lake Eurasian Watermilfoil Chemical Purchase |
| Project Summary (2-3 sentence description): | Purchase 750 gallons of AMINE4 2,4-D liquid chemical to help control Eurasian watermilfoil on Union Lake. |
| What is the need you wish to address? How does this fit with the funding priorities of this grant? | Control spread of watermilfoil. Will help to limit spread of watermilfoil to other lakes within Polk County and across the state. |
| What are the specific goals? | Treat target areas of the lake to control the spread, including public access |
| Who will benefit from the project? | All lake users of Union Lake and other lakes. |
| Will proposed project provide other public benefits besides AIS prevention? Explain? | Will help water recreation on Union Lake. |

**Active Partnerships:**
Identify partners and how they will be actively involved in the planning, implementation and evaluation of project.

| Who | Organization Affiliation | Role |
|---|---|---|
| DNR | | **Permit and Inspection** |
| AIS Taskforce | **Polk County** | **Funding** |

**Action Plan:**
How will the project goals be achieved? Outline below the action steps or key activities you are planning to implement, persons responsible, and the timeline for each to complete the proposed project.

| Action Steps (Key Activities) | Responsible Entity | Timeline |
|---|---|---|
| Spread chemical with ULSID Volunteers | ULSID | Twice per year |
| | | |
| | | |
| | **Projected End Date** | Ongoing |

**Proposed Budget Using County AIS Project Grant Funding:** Provide a detailed budget with explanations for how you will use the funding you are requesting from this grant program to implement your action plan.

| Description | Amount Requested |
|---|---|
| Purchase 750 gallons of liquid herbicide (this is 3/4 of the bill) | $ 6 005.43 |
| | |
| | |
| **Total Amount Requested** | $ 6005.43 |

**Proposed Full Project Budget:** Please complete full project budget. Include income from all sources including County AIS Grant Funds. Income should include confirmed cash and in-kind services that will contribute to project.

| **Income (list sources)** | **Cash Amount** | **In-Kind (estimate $ amount)** |
|---|---|---|
| ULSID Cash Match | | $ 2001.81 |
| County AIS Grant (amount requested) | | $ 6 005.43 |
| **Total** | | $ 8007.24 |
| **Expenses** | **Cash Amount** | **In-Kind (estimate $ amount)** |
| Purchase Chemical | | |
| Volunteer Labor | | $1,000.00 |
| Tow Vehicles, Fuel and Oil | | $500.00 |
| Chemical Storage | | $500.00 |
| **Total** | | $2,000.00 |

Select Ag Inc.

1605 250th ST
PO Box 130
Mahnomen MN 56557

# Estimate

| Date | Estimate # |
|---|---|
| 7/30/2020 | 1 |

| Name / Address |
|---|
| Lonnie Paradis |

| Project |
|---|
| |

| Description | Qty | Cost | Total |
|---|---|---|---|
| 2,4_D Amine 4 lb 2 x 2.5 gal | 750 | 10.60 | 7,950.00T |
| ACRRA/Gross sales fee | | 0.72% | 57.24 |
| | | **Total** | $8,007.24 |

Customer Signature _____

# TDS FERTILIZER INC.

515 North Mill Street • Fertile, MN 56540 • (218) 945-6021

**Sales Order**

**No.** 10442

Account Name:

City/State: Union Lake-Sarah Improvement District

Date 7/31/20

| Item # | Driver Name: | | | Deliver to Customer or Return for Credit - *(Circle One)* | Notes: | |
|---|---|---|---|---|---|---|
| | Quantity Full Cases | Partial or Individuals | Unit Size | Product Description | Total Unit GA/LBS/OZ/EA | Price Amount |
| | | | | | | |
| | | | | | | |
| | | | 750gk | 2-4-D Amine - Agristar 11.50/gl | 750 | 8625.- |
| | | | | | | |
| | | | | -Bid- 2021 | | |
| | | | | | | |
| | | | | email to lonnie@paradisinc.com | | |
| | | | | | | |
| | | | | | | |
| | | | | | | |
| | | | | | | |
| | | | | | | |
| | | | | | | |
| | | | | | | |
| | | | | | | |
| | | | | | | |
| | | | | | | |
| | | | | | | |

364,208 • Victor Lundeen Co., Printers • Fergus Falls, MN • 1-800-346-4870

# Board of Commissioners

Polk County Government Center
612 N Broadway – Room 211
Crookston, MN 56716-1452

TO: POLK COUNTY BOARD OF COMMISSIONERS

CC: CHUCK WHITING, POLK COUNTY ADMINISTRATOR

FROM: SARAH REESE, PUBLIC HEALTH DIRECTOR

MEETING DATE: October 6, 2020

AGENDA ITEM: Medical Professional Liability Policy

SUMMARY:

Consulted with the County Administrator (and previously with MCIT). Requesting approval for a Medical Professional Liability Policy from Midwest Medical Insurance Company (MMIC).

$1M per occurrence/$3M annual aggregate coverage levels on a claim made basis.

Annual premium for the policy will be $529.

ACTION REQUESTED: Motion to approve a Midwest Medical Insurance Company - Medical Professional Liability Policy with $1M/$3M coverage levels.

MMIC

# Quote Proposal

Prepared For:

Jami Mathews NP

September 18, 2020

By MMIC

In partnership with:

Holmes Murphy - Minneapolis

## Thank you for the opportunity to provide this quote proposal.

This quote proposal is based upon MMIC policy terms and conditions and the information provided as of the quote proposal date. It is meant to provide a general overview of the policy described and may change upon receipt of new information provided. The actual language of the policy issued will control the specific coverages available. For a detailed description of coverage terms and conditions, please refer to the policy. This quote proposal expires on the effective date of the policy term listed.

# Quote Proposal

| | |
|---|---|
| **Policyholder:** | Jami Mathews NP<br>816 Marin Ave, Ste 125<br>Crookston MN, 56716 |
| **Policy Term:** | 9/14/2020 To 9/14/2021 |
| **Quote Number:** | QMAP1120-01 |
| **Payment Option:** | Full payment or quarterly installments with no finance charge |

**Premium Summary:**

| | |
|---|---|
| $529 | Total Medical Professional Liability Premium |
| $529 | Total Premium |

**Comments:**

MMIC

## Summary of Coverage

| Medical Professional Liability Insurance | | |
|---|---|---|
| Coverage Type: Claims-made | **Limits of Liability** | **Deductible** |
| Each Medical Incident Limit | $1,000,000 | $0 |
| Individual Insured Aggregate Limit | $3,000,000 | $0 |
| Aggregate Deductible | | $0 |
| **Additional Benefits** | **Limit** | **Deductible** |
| Licensure Proceeding - Each Complaint | $25,000 | $0 |
| Licensure Proceeding - Each Insured Aggregate | $25,000 | $0 |
| Insured Expenses - Each Day | $1,000 | $0 |
| Each Patient Medical Expense Limit | $10,000 | $0 |
| Aggregate Patient Medical Expense Limit | $50,000 | $0 |

## Schedule of Insureds

| Insured | Prior Acts Date | Classification | Specialty Description | Premium |
|---|---|---|---|---|
| Mathews NP, Jami | 09/14/2020 | 25013 | Nurse Practit | $529 |
| **TOTAL MEDICAL PROFESSIONAL LIABILITY PREMIUM:** | | | | **$529** |

Comments:
Claims-Made and Reported Step Premiums are as follows:

| Year 1 | Year 2 | Year 3 | Year 4 | Year 5 |
|---|---|---|---|---|
| $529 | $821 | $997 | $1,056 | $1,173 |

Extension of coverage is contingent on the receipt of a statement of No Know Losses

MMIC

# Optimize Coverage for Health Care Providers

## Medical Professional Liability Coverage Highlights

| | |
|---|---|
| **Broad Coverage Trigger** | A claim is first made when MMIC receives notice of a claim or an event which may subsequently give rise to a claim. |
| **Consent to Settle** | We will not settle any medical professional liability claim without prior written consent of the policyholder. This provision does not apply in Wisconsin and Indiana due to state statute. |
| **World-Wide Coverage** | Coverage is provided anywhere in the world provided the claim is brought in the United States of America, its territories or possessions. |
| **Limits of Liability** | Limits apply separately to each individual and entity listed on the schedule of insureds. The limits also apply separately to each injured person. For birth related claims, one limit will apply to the child and a second limit will apply to the mother, if injured.<br><br>If shared limits of liability are indicated, they apply on a shared basis. |
| **Defense Costs and Prejudgment Interest** | Defense costs and prejudgment interest are paid in addition to the policy limits. The limits of liability are not eroded by these payments. |
| **Insured Expenses** | Up to $1,000 per day is provided for reasonable expenses, including lost income, that an insured incurs in complying with our specific request to attend a deposition or appear at a trial or similar formal proceeding. There is no aggregate. |
| **Licensure Proceedings** | Up to $25,000 each complaint ($25,000 each insured aggregate) is provided for fees charged by an attorney to represent an individual insured or an insured's employees to respond to a formal complaint from a governmental body responsible for the licensure of health care professionals. |
| **Employee and Volunteer Workers Coverage** | Coverage is automatically included for most employees and volunteer workers. For coverage to apply to nurse anesthetists, nurse midwives, heart-lung perfusionists, podiatrists, leased health care providers, interns, externs, residents and dental, osteopathic, chiropractic or medical doctors, they must be scheduled on the policy. |
| **Locum Tenens (Substitute Provider)** | Coverage is automatically provided to locum tenens on a shared limit basis if an insured agreed in a written agreement to provide professional liability insurance. Coverage does not apply in Indiana, Kansas, Nebraska and Wisconsin due to patient compensation fund requirements. |
| **Vicarious Liability** | Vicarious liability coverage is included for claims arising out of professional services that were or should have been provided by a person for whom the insured is liable. |
| **Extended Reporting Period Provisions – if Claims-Made** | The extended reporting period premium is waived in the event of death, total and permanent disability, attainment of age 60 with 15 years continuous coverage, attainment of age 62 with 10 years continuous coverage and permanent retirement with one year of continuous coverage with us. |
| **Extended Reporting Period Limits of Liability – if Claims-Made** | The aggregate limit for the reporting endorsement applies separately to each of the reporting periods:<br>1) The first 12 months following the date coverage was cancelled or not renewed;<br>2) The second 12 months following the date coverage was cancelled or not renewed;<br>3) Any remaining policy period the reporting endorsement is in effect. |

# Board of Commissioners

Polk County Government Center
612 N Broadway – Room 211
Crookston, MN 56716-1452

TO: POLK COUNTY BOARD OF COMMISSIONERS

CC: CHUCK WHITING, POLK COUNTY ADMINISTRATOR

FROM: SARAH REESE, PUBLIC HEALTH DIRECTOR

MEETING DATE: October 6, 2020

AGENDA ITEM: Advertisement and Hiring Wellness Coordinator – Dental Innovation Coordinator

SUMMARY:

Wellness Coordinator – Dental Innovation Coordinator has submitted their resignation.

This is a request for approval of the advertisement and replacement of this position and any subsequent vacancies within Polk County Public Health.

ACTION REQUESTED: Motion to approve advertisement and hiring of a Wellness Coordinator- Dental Innovation Coordinator and replace any subsequent vacancies.