1. 8:00 A.M. Agenda And Meeting Materials

Documents:

03-24-2020.PDF

**Revised
POLK COUNTY BOARD
MEETING LOCATION: GOVERNMENT CENTER, CROOKSTON, MN
COMMISSIONERS ROOM
AGENDA
MARCH 24, 2020

8:00 A.M. MEETING OPEN/CONVENE
CALL TO ORDER

REVIEWAL & APPROVAL OF THE AGENDA

CONSENT AGENDA
1. Approve the March 17, 2020 Board minutes.
2. Approve payment to Minnesota Counties Intergovernmental Trust, St. Paul, MN in the amount of $42,908.00 for 2020 Property Re-Insurance Coverage for the Resource Recovery Facility.
3. Approve payment to Enterprise FM Trust, Kansas City, MO in the amount of $10,460.60 vehicle maintenance for the Sheriff's Office.

COUNTY BOARD MEMBERS ISSUE FORUM

8:30 JIM TADMAN - SHERIFF
1. Purchase Of New Emergency Management/Command Trailer
2. Resolution (2020-32) Accepting Financial Donations On Behalf Of The Polk County Sheriff's Office From The City Of Climax In Memory Of Gary Letness
3. Resolution (2020-33) Accepting Financial Donations On Behalf Of The Polk County Sheriff's Office From Kustom Kollision, LLC, Crookston, MN
4. Monthly Sheriff Reports

8:50 JON STEINER – ENVIRONMENTAL SERVICES
1. Tire Recycling Contract 2020
2. 2020 Score Resolution
3. Landfill Expansion – Wetland Replacement
   a. Addenda 1 & 2
4. *Amendment #01 – CY 2020 – CY 2022 Polk County Roll-Off Hauling Contract

9:10 RICHARD SANDERS - HIGHWAY
1. New or Low Hour Used Motor Grader
2. Radios For Highway Department
3. SP 060-621-014 CSAH 21 from TH 220 to TH 75
4. SP 060-601-061 CSAH 1 from CSAH 10 to TH 59 & SP 060-616-010 CSAH 16 from TH 75 to CSAH 9
5. SAP 060-620-018 CSAH 20 from CSAH 19 to CSAH 21

9:30 CHUCK WHITING - ADMINISTRATOR
1. Resolution (2020-34) Declaring A State Of Emergency (COVID-19)
2. **Resolution (2020-35) Restricting Public Access To County Buildings During The Novel Coronavirus Outbreak Of 2020
3. Discussion of Future County Board Meetings and Public Access

10:00 SARAH REESE – PUBLIC HEALTH DIRECTOR
1. COVID-19 Update

ADJOURN

If you need any type of accommodation to participate in the Polk County Board meeting, please contact Chuck Whiting at (218) 281-5408 at least 1 working day before the meeting. This Board agenda is subject to change without notice.

**MARCH 17, 2020**
**BOARD MINUTES**

Pursuant to motion of adjournment the Polk County Board of Commissioners met in regular session at 9:30 o'clock a.m., March 17, 2020 in the Commissioners Room, Government Center, Crookston, MN. Members present: Commissioner Gerald Jacobson, Commissioner Warren Strandell, Commissioner Gary Willhite, Commissioner Joan Lee and Commissioner Don Diedrich and Charles S. Whiting, County Administrator, Clerk of the Board. Others present: Michelle Cote, Deputy Clerk of the Board.

## REVISED AGENDA

A motion was made by Commissioner Lee seconded by Commissioner Jacobson and adopted by unanimous vote of the Board to approve the revised agenda adding No. 5 under the consent agenda and removing MNDOT for March 17, 2020.

## REVISED CONSENT AGENDA

A motion was made by Commissioner Strandell seconded by Commissioner Diedrich and adopted by unanimous vote of the Board to approve the consent agenda for March 17, 2020:

1. Approve Commissioner Warrants: General Revenue Fund, $150,277.93; Public Works Fund, $82,964.09; Public Safety Fund, $30,526.80; Public Health Fund, $21,523.77; Forfeited Tax Sale Fund, $100.00; CAP Grant Project, $1,376.00; Environmental Services Fund, $13,339.04; Resource Recovery Fund, $116,454.10; Landfill Fund, $31,284.10; Per Diems, $1,650.00; Meal Reimbursements (without overnight lodging), $224.60 and Sign Audit List.
2. Approve the February 4, February 18, February 25 and March 3, 2020 Board minutes.
3. Approve payment to Card Member Services, St. Louis, MO in the mount of $14,622.89 for credit card purchases.
4. Approve payment to Hewlett Packard, Inc., Boston, MA in the amount of $5,271.82 for docking stations, monitors and laptops for the MIS Department.
5. *Approve payment to US Bank, St. Louis MO in the amount of $140,687.38 for procurement card purchases.

## COUNTY BOARD MEMBER ISSUE FORUM

1. Commissioner Jacobson brought forth that he attended a Maple Lake Improvement Association meeting regarding large boat canopy covers. He also participated in a subcommittee meeting for Northwestern Mental Health Center focused on outreach and promotion. In addition he participated in the Land of the Dancing Sky Agency on Aging meeting where the focus was getting food to seniors during the COVID 19 crisis.
2. Commissioner Strandell brought forth that he participated in a meeting with East Grand Forks officials regarding the closing of City buildings to the public. He also participated in the Tri-County Community Corrections meeting. In addition he attended the Northwest Regional Development Commission and Radio Board meeting.
3. Commissioner Willhite brought forth that he participated in the Tri-Valley Opportunity Council meeting.
4. Commissioner Lee brought forth that she participated in a Solid Waste Advisory Board meeting.

5. Commissioner Diedrich brought forth that he participated in a Tri-Valley Opportunity Council meeting where the financial audit was the focus. In addition he attended a MCIT meeting where the COVID 19 virus was the focus.
6. The Polk County Township Association meeting scheduled for March 24, 2020 has been cancelled.

**COUNTY ATTORNEY**

Greg Widseth came before the Board with matters pertaining to his department:

1. **Closed Session – Pursuant To Minnesota Statutes 13D.05, Subd. 3(b) And The Attorney Client Privilege, To Discuss Proposed Settlement Of Town Square General L.L.C. Tax Appeal**
   A motion was made by Commissioner Strandell seconded by Commissioner Lee and adopted by unanimous vote of the Board to move into closed session at 10:02 a.m.
2. **Action To Move Back Into Open Session To Address Settlement Proposal Of Town Square General L.L.C. Tax Appeal**
   A motion was made by Commissioner Jacobson seconded by Commissioner Diedrich and adopted by unanimous vote of the Board to reconvene into regular session at 10:08 a.m. A motion was made by Commissioner Strandell seconded by Commissioner Diedrich and adopted by unanimous vote of the Board to accept the stipulation as presented and authorize the County Attorney to sign said stipulation.
3. **Regulation of Large Boat Canopy Covers**
   Discussion along with a handout pertaining to large boat canopy covers on public waters within Polk County was presented to the Board. (Handout on file in the Administrator's Office)

**SOCIAL SERVICES**

Karen Warmack, Social Services Director came before the Board with matters pertaining to her department:

1. **Two Child Support Officer Positions Replacement Requests**
   A motion was made by Commissioner Strandell seconded by Commissioner Diedrich and adopted by unanimous vote of the Board to approve refilling two (2) Child Support Officer positions and any internal subsequent position vacancies occurring as a result of this action.
2. **Eligibility Worker Position Replacement Request**
   A motion was made by Commissioner Jacobson seconded by Commissioner Lee and adopted by unanimous vote of the Board to approve refilling an Eligibility Worker position working with Adult Services and any internal subsequent position vacancies occurring as a result of this action.
3. **Eligibility Worker Position Replacement Request**
   A motion was made by Commissioner Diedrich seconded by Commissioner Strandell and adopted by unanimous vote of the Board to approve refilling an Eligibility Worker position working with the METS Program and any internal subsequent position vacancies occurring as a result of this action.

**ADMINISTRATION**

Chuck Whiting, Polk County Administrator came before the Board with matters pertaining to his department:

1. **Employer Support of the Guard and Reserve Day**
   Discussion along with a handout/agenda pertaining to The Army National Guard's 2/136 Combined Arms Battalion and ESGR Employer Day have invited employers to an employer-focused event at Camp Ripley, MN. This Employer Day will entail seeing and hearing what your Minnesota Army National Guard Service members do, view some of their equipment and observe a portion of their training along with other activities. This daylong activity would mean flying from Crookston Airport to Camp Ripley and back by helicopter that day. (Handout on file in the Administrator's Office)
   ** This event has been postponed.
2. **Follow Up Review Of Enterprise Software Proposals**
   Discussion along with a handout pertaining to the updates on the Munis Software Options from Tyler Technologies was presented to the Board. Geniene Scherer from Abdo, Eick & Meyer attended the Board meeting via web portal to review the changes made since the last Board discussion on these options. (Handout on file in the Administrator's Office)

**HIGHWAY**

Richard Sanders, Polk County Highway Engineer came before the Board with matters pertaining to his department:

1. **Sweeper Quotes**
   A motion was made by Commissioner Diedrich seconded by Commissioner Jacobson and adopted by unanimous vote of the Board to contract with Total Lawn Care, Crookston, MN in the amount of $92.00 per hour for street sweeping services in small cities for 2020.
2. **Resolution (2020-30) CSAH 2 From TH 92 To Polk Pennington County Line – 60 MPH**

**CSAH 2 From TH 92 to Polk Pennington County Line**
**60 MPH**
**RESOLUTION (2020-30)**

The following resolution (2020-30) was offered by Commissioner Strandell:

WHEREAS, County State Aid 2 from TH 92 to Polk Pennington County Line has a speed limit of 55 mph as per MN Statute 169.14.

WHEREAS, State Statutes and the Minnesota Department of Transportation regulation govern speed zoning on local roads.

WHERAS, Polk County believes the speed limits on County State Aid Highway 2 should be increased to 60 mph outside the city limits of Gully from TH 92 to Polk Pennington County Line.

NOW THEREFORE BE IT RESOLVED, By the Board of County Commissioners of Polk County that the Minnesota Department of Transportation restudy the posted limits on CSAH 2.

Commissioner Lee seconded the foregoing resolution and it was declared adopted upon the following vote: YEAS: Lee, Diedrich, Willhite, Strandell and Jacobson. NAYS: None.

3. **Resolution (2020-31) Bridge Replacement Priority List**

**Bridge Replacement Priority List**
**RESOLUTION (2020-31)**

The following resolution (2020-31) was offered by Commissioner Lee:

WHEREAS, Polk County has reviewed the pertinent data on bridges requiring replacement, rehabilitation, or removal, supplied by local citizenry and local units of government; and

WHEREAS, Polk County has identified those bridges that are high priority and that require replacement, rehabilitation, or removal within the next five years;

WHEREAS, Polk County has determined that the following deficient bridges on the County State Aid Highway, County Road and Township systems are a high priority and require replacement or rehabilitation and

| Bridge No. | New Bridge No. | Road No. | Estimated Proj. Cost | Federal | Local | Bridge Funds | Proposed Const. Yr. |
|---|---|---|---|---|---|---|---|
| 7041 | 60567 | CSAH 1 | 800,000 | | 400,000 | 400,000 | 2020 |
| 7042 | 60568 | CSAH 1 | 800,000 | | 400,000 | 400,000 | 2020 |
| 5767 | 60565 | CSAH 1 | 4,000,000 | | 500,000 | 3,500,000 | 2020 |
| LT10 | 60L49 | Brandsvold | 150,000 | | 10,000 | 140,000 | 2020 |
| 60504 | | CSAH 9 | 600,000 | | 300,000 | 300,000 | 2021 |
| | | | | | | | |
| L7510 | | Euclid | 65,000 | | 5,000 | 60,000 | 2021 |
| L5792 | | Kertsonville | 75,000 | | 5,000 | 70,000 | 2021 |
| L7624 | | Lessor | 75,000 | | 5,000 | 70,000 | 2021 |
| L5788 | | Chester | 400,000 | | 20,000 | 380,000 | 2021 |
| L7522 | | Scandia | 400,000 | | 20,000 | 380,000 | 2021 |

WHEREAS, Local roads play an essential role in the overall state transportation network and local bridges are the critical component of the local road systems, and

WHEREAS, The State's support for the replacement or rehabilitation of local bridges continues to be crucial to maintaining the integrity of the local road systems and is necessary for the county and townships to proceed with the replacement or rehabilitation of the high priority deficient bridges described above; and

WHEREAS, Polk County intends to proceed with replacement or rehabilitation of these bridges as soon as possible when Funds are available.

FURTHERMORE, Polk County does hereby request authorization to replace, rehabilitate, or remove such bridges; and

FURTHERMORE, Polk County does hereby request financial assistance with eligible approach grading and engineering costs on township bridges, as provided by law.

NOW THEREFORE BE IT RESOLVED, That Polk County commits that it will proceed with the design and contract documents for these bridges immediately after being notified that funds are available in order to permit construction to take place within one year of notification.

Commissioner Strandell seconded the foregoing resolution and it was declared adopted upon the following vote: YEAS: Lee, Diedrich, Willhite, Strandell and Jacobson. NAYS: None.

**PUBLIC HEALTH**

Sarah Reese, Public Health Director came before the Board with matters pertaining to her department:

1. **COVID 19 Status Report**
   An update was given to the Board regarding the COVID 19 virus. A motion was made by Commissioner Strandell seconded by Commissioner Diedrich and adopted by unanimous vote of the Board to allow the County Administrator latitude to concur with the Chairman of the County Board in the decisions regarding the safety and welfare of the County employees during the COVID 19 event.

****MNDOT - CANCELLED**

**COMMISSIONER WARRANTS**

A motion was made by Commissioner Strandell seconded by Commissioner Diedrich and adopted by unanimous vote of the Board that the following Commissioner Warrants were approved:

COMMISSIONER WARRANTS
DATED 03/20/2020
APPROVED 03/17/2020

| Vendor Name | Amount |
|---|---|
| Acuity Specialty Products Inc | 3,345.19 |
| Altru Health System | 2,360.00 |
| Ameripride Linen & Apparel Service | 2,046.33 |
| Architectural Resourses Inc | 5,198.75 |
| Beltrami Industrial Services | 67,405.38 |
| Brad's Electric | 2,120.18 |
| Cardinal Health | 2,013.53 |
| Carlson Inc/Re | 2,040.00 |
| Church & Dwight Co Inc | 9,317.64 |
| Code 4 Services Inc | 10,555.63 |
| Crookston Fuel Company | 3,818.40 |
| D & T Ventures, LLC | 3,175.00 |
| Domson BG Service | 2,962.00 |
| DS Solutions Inc | 2,132.00 |
| Fosston Municipal Utilities | 2,446.55 |
| Hennen Equipment Inc | 3,734.32 |
| HP INC | 57,710.47 |
| Intradyn | 5,100.00 |
| Lean Packaging | 3,879.56 |
| Lenes Sand & Gravel Inc | 5,500.00 |
| MCCC BIN#135033 | 9,840.00 |
| Morris Electronics Inc | 2,986.20 |
| Northern Propane | 11,624.99 |
| Polk County Administrator | 3,048.46 |
| Polk County Highway Department | 12,794.81 |
| SeaChange Printing & Marketing | 3,333.81 |
| TheraCom LLC | 6,530.30 |
| U S Water Services | 6,107.51 |
| US Bank Voyager Fleet Sys | 5,005.31 |
| Vanguard Appraisals Inc | 20,546.00 |
| Wenck Associates Inc | 20,977.60 |
| Widseth Smith Nolting & Assoc | 36,889.94 |
| Winter Truck Line Inc | 2,073.50 |
| Ziegler Inc | 3,614.65 |
| Ziegler Inc | 4,927.55 |
| 243 Payments less than 2000 | 100,684.27 |
| **Final Total:** | 447,845.83 |

With no further business the Board adjourned to reconvene at 8:00 o'clock a.m., March 24, 2020.

_____
Gary Willhite, Chair

ATTEST:

_____
Charles S. Whiting, County Administrator
Clerk of the Board

# Board of Commissioners

Polk County Government Center
612 N Broadway – Room 211
Crookston, MN 56716-1452

**TO:** Board of Commissioners and Chuck Whiting-Administrator
**FROM:** James Tadman, Sheriff
**MEETING DATE:** 03/24/20
**AGENDA ITEM:**

1. Purchase of New Emergency Management / Command Trailer
2. Resolution (2020-32) Accepting Financial Donations On Behalf Of Polk County Sheriff's Office From The City of Climax In Memory Of Gary Letness
3. Resolution (2020-33) Accepting Financial Donations On Behalf Of Polk County Sheriff's Office From Kustom Kollision, LLC, Crookston, MN
4. Monthly Sheriff's Reports

**SUMMARY:**

1. Sheriff's Office currently has a 1997 26' camper trailer donated by FEMA. I would like to purchase a new EM / Command trailer and request to use funds from Public Safety Account. Purchase amount $29,105.00.
2. Polk County received a $100.00 donation from City of Climax in memory of Gary Letness. Funds to be used for K9 Program.
3. Polk County received a $500.00 donation from Kustom Kollision LLC, Crookston, MN. Funds to be used for K9 Program.
4. Review Sheriff's Office Monthly Reports.

**ACTION:**

1. Grant permission to use Public Safety funds to purchase EM / Command trailer in the amount of $29,105.00
2. Resolution (2020-32) Accepting Financial Donations On Behalf Of Polk County Sheriff's Office From The City of Climax In Memory Of Gary Letenss
3. Resolution (2020-33) Accepting Financial Donations On Behalf Of Polk County Sheriff's Office From Kustom Kollision, LLC, Crookston, MN
4. For Information Only

Project Quote # 2088

3/13/2020

Prepared for Polk County

| Item Description | Amount |
|---|---|
| **8'x29'x 6"x6" 3 piece torsion double gusset front A frame with 2"x6" full tube cross members** | **$15,595.00** |
| Heavy Duty Dual Axles (rated at 4500# each) | $1,500.00 |
| 66"x80" Toy Hauler Door | $1,400.00 |
| Factory Select Paneling | $450.00 |
| Bullet Proof Hydraulic System with 1/4" cylinders | $3,300.00 |
| 4-225/75R5 6-bolt tires | $450.00 |
| 15x6JJ Mag rims | $300.00 |
| Pine Cabinets | $180.00 |
| LED lighting package | $450.00 |
| Cold weather crack resistent non-slip rubber flooring 232 square feet | $950.00 |
| 900w microwave | $75.00 |
| Wire, Brace, HDMI, RCA, and coaxial cables for 2 TV set | $395.00 |
| 30,000 BTU Forced Air Furnace | $610.00 |
| Stereo with 4 speakers with hard-wire for TV monitors | $550.00 |
| Stainless Steel dual basin sink | $250.00 |
| Seamless countertops | $500.00 |
| Bench seating | $550.00 |
| 6-12v and 8-100v outlets | $250.00 |
| 13,500 BTU high efficiency ceiling mount air conditioner | $750.00 |
| 100v refrigerator | $100.00 |
| 72" Jack Knife sofa | $500.00 |
| Subtotal | $29,105.00 |
| Tax Rate | 0.00% |
| Other Costs | |
| Total Cost | $29,105.00 |

Dealer: _____
Siding Color: WHITE
Decal Color: NONE
S.G. Color: _____
Customer: POLK COUNTY
Order Date: _____

**Frame Options**

MFG: _____

Galvanized
Yes: ☐ No: X

# 8 X 24V RV Limited ~ 2020

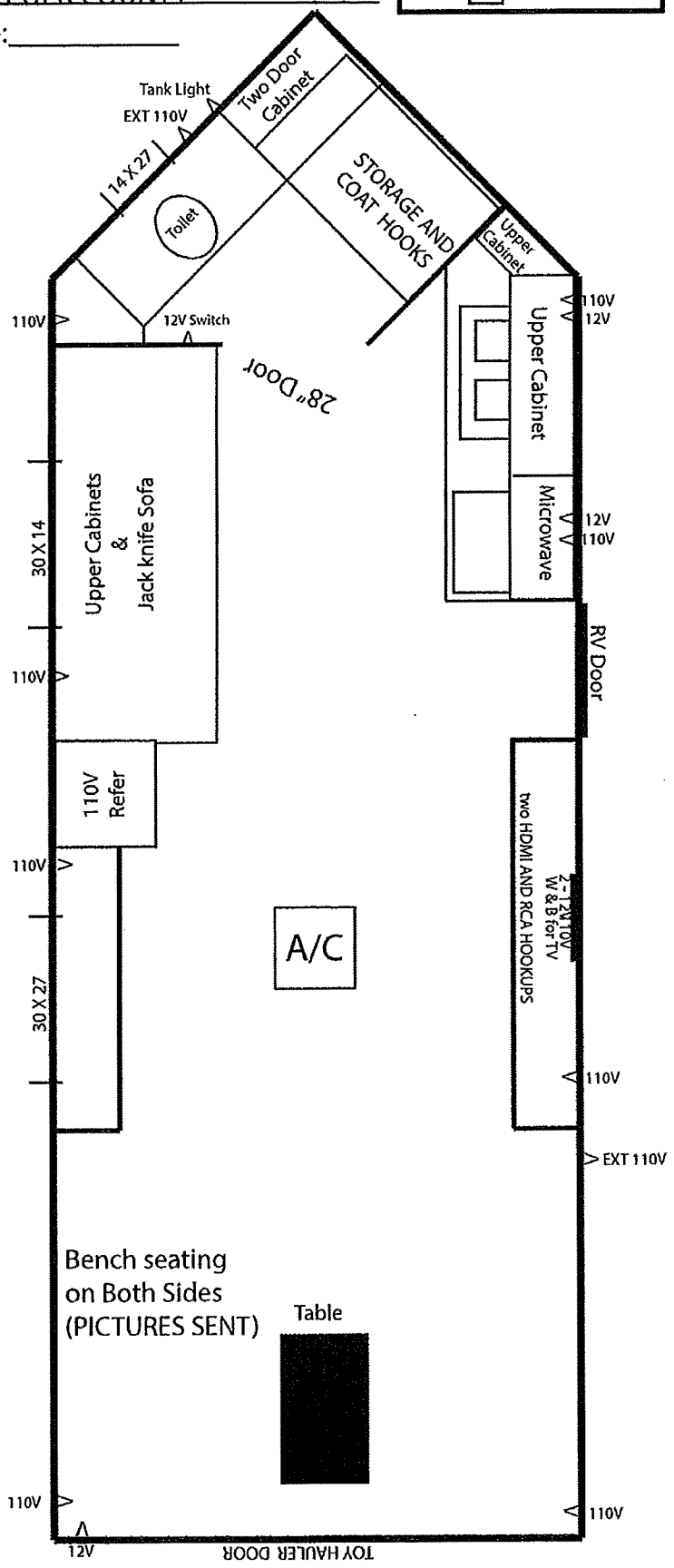


Dual Axle Hydraulic Frame
Rated at 4500# each with
Safety Pins
Factory Select Paneling
Pine Cabinets
Flat Ceiling
Rubber Floor
13,500 BTU A/C
Extra lighting every 2'
LED Inside & Out
Can Ceiling Lights
Digital TV Antenna
Wire & Brace for TV
Wire for Portable Satellite
Stereo w/4 speakers
12V Recepts
110V Recepts
28" Bathroom Door
Bath w/toilet

Stainless steel double sink
900w Microwave
110V refrigerator
Raised Panel Doors w/New Hinges
Brown curtains
30,000 BTU Furnace
Upper Cabinets
72" Jack Knife Sofa
66"x80" Heavy Duty Toy Hauler Door
New Seamless Countertop

4 - 225/75R5 6-Bolt tires with
15x6JJ Mag rims

Production # _____

Revised 01/22/2019

TRAVEL LOCK PIN

MANUFACTURED BY : AMERICAN SURPLUS & MFG., INC.

DATE OF MFG. : 04/2019

GVWR : 4082 KG (9000 LB)

| GAWR (EACH AXLE) | WITH TIRES | RIMS AT | COLD | |
|---|---|---|---|---|
| 2041 KG (4500 LB) | 225/75R15 | 15X6JJ | 552 KPA (80 PSI) | DUAL |

THIS VEHICLE CONFORMS TO ALL APPLICABLE U.S. FEDERAL MOTOR VEHICLE SAFETY STANDARDS IN EFFECT ON THE DATE OF MANUFACTURE SHOWN ABOVE

V.I.N. : 5TJBE3220LM027972 TYPE : TRAILER

8X24V DIAMOND

Quote #: 91598
Advantage Requote Mobile Comand Vin# 217786

| Status: | Version: | Created: | Revised: |
|---|---|---|---|
| Quote | 1.0.0 | 8/7/2019 | 8/7/2019 |

WORLD CLASS TRAILERS
http://www.aluminumtrailer.com


SALES CONTACT:

Ed Stevens
ed@advantagetrailer.com
630-580-5840 (Work)

ADVANTAGE TRAILERS & HITCHES

110 E. North Ave.
Carol Stream, IL 60188
888-280-6695
www.advantagetrailer.com


CONTACT INFORMATION

Advantage

NOTES

## MODEL INFO

Configured Model #: QSTSB8524+0-2T5.2K
Quest Steel Trailer
8.5'W x 24'L x 7.0'H, (2) 5200# Torsion Axle(s)
Warranty: 5 YR STR, 3 YR LTD, 1 YR ELEC WARRANTY

COLOR: POLAR WHITE
COLOR REAR: NONE
COLOR - CABINETS: POLAR WHITE

## SPECIFICATIONS

| Part Name | Qty | UOM | Total Ext. $ | Ref. |
|---|---|---|---|---|
| **BASE MODEL** | | | | |
| QSTSB8524+0-2T5.2K | 1 | ea | $11,923 | OPT |
| **PACKAGES** | | | | |
| PACKAGE - ELECTRICAL #2 | 1 | ea | | OPT |
| PACKAGE - SAFETY | 1 | ea | | OPT |
| **FRAME** | | | | |
| AXLE - 5200# - TORSION - EZ LUBE HUBS - ELECTRIC BRAKES<br>• GROUND CLEARANCE: STANDARD (APPROX. 14.25" - NO LOAD) | 2 | ea | | STD |
| AXLE SPACING - SPREAD AXLE | 1 | ea | | STD |
| ALL TUBE WALL CONSTRUCTION | 24 | ft | | STD |
| COUPLER - A-FRAME - 2-5/16" - 10,000# | 1 | ea | | STD |
| CROSS MEMBERS - FLOOR - 16" O/C | 24 | ft | | STD |
| CROSS MEMBERS - ROOF - 16" O/C - 1" X 3" | 24 | ft | | STD |
| CROSS MEMBERS - WALL - CS - 16" O/C - 1" X 1.5" | 24 | ft | | STD |
| CROSS MEMBERS - WALL - RS - 16" O/C - 1" X 1.5" | 24 | ft | | STD |
| FLOOR DESIGN - FLAT | 1 | ea | | STD |
| FRAME - 5" | 24 | ft | | STD |
| FRAME - FULL PERIMETER - STEEL - PAINTED | 24 | ft | | STD |
| FRAME PROTECTION - SKID PLATES | 1 | pr | | STD |
| FRAME PROTECTION - BOGEY WHEELS | 1 | pr | $247 | OPT |
| FRONT DESIGN - FLAT | 1 | ea | | STD |

| | | | |
|---|---|---|---|
| TANK - FUEL - GAS - 24 GALLON - END FILL - IN FRAME | 1 ea | $2,233 | OPT |
| JACK - TONGUE - TOP WIND - 5000# - ZINC | 1 ea | | STD |
| JACK - STABILIZER - SCISSOR - 24" - 5000#<br>• Location: FRONT & REAR | 2 pr | $748 | OPT |
| TIRE/WHEEL - ST225/75R15/LRE - RADIAL ON GREY MOD | 4 ea | | STD |
| SPARE TIRE/WHEEL - ST225/75R15/LRE - RADIAL ON GREY MOD | 1 ea | $208 | OPT |
| TONGUE - EXTENDED TRIPLE TUBE - 12" | 1 ea | $206 | OPT |
| TRUCK PLUG - 7 WAY - BUMPER PULL | 1 ea | | STD |
| BACKER - ST - 12 GA - CEILING | 3 sq | $72 | OPT |
| **EXTERIOR** | | | |
| AWNING - MANUAL WITH ALUMINUM WEATHERSHIELD - 21' - POLAR WHITE - ONYX VINYL FABRIC | 1 ea | $1,625 | OPT |
| AWNING CENTER SUPPORT CRADLE | 1 ea | $65 | OPT |
| EXTERIOR ALUMINUM - STANDARD COLOR<br>• COLOR: POLAR WHITE | 24 ft | | STD |
| EXTERIOR FASTENER - SCREWLESS | 24 ft | | STD |
| EXTERIOR ALUMINUM THICKNESS - .030 | 24 ft | | STD |
| FENDERETTES - AL | 4 ea | | STD |
| GRAVEL GUARD - ATP - 24" - WITH J RAIL | 1 ea | | STD |
| LADDER - EXTERIOR - FIXED | 1 ea | $531 | OPT |
| ROOF - ONE PIECE - ALUMINUM | 24 ft | | STD |
| ROOF - WALK ON - PLYWOOD - 3/8"<br>• 175 LBF / LINEAR FT - NOT TO EXCEED 2000# FOR ENTIRE ROOF | 24 ft | $768 | OPT |
| TRIM - VERTICALS - FRONT - COLOR MATCHED | 1 ea | | STD |
| TRIM - HEADER - REAR - COLOR MATCHED | 1 ea | | STD |
| TRIM - VERTICALS - REAR - COLOR MATCHED | 1 ea | | STD |
| TRIM - RUB RAIL - UPPER - ALUMINUM - 3" | 24 ft | | STD |
| TRIM - RUB RAIL - LOWER - ALUMINUM - 3" | 24 ft | | STD |
| VENT - ROOF - 12V FANTASTIC FAN<br>• RAIN SENSOR<br>• REVERSIBLE FAN<br>• WALL MOUNT THERMOSTAT<br>• BATTERY NOT INCLUDED | 1 ea | $505 | OPT |
| WINDOW - EGRESS W/ SLIDER AND SCREEN - 36"W X 24"H - ROADSIDE | 1 ea | $428 | OPT |
| WINDOW - SLIDER W/ SCREEN - 36"W X 24"H - ROADSIDE | 1 ea | $330 | OPT |
| **DOORS** | | | |
| DOOR - REAR RAMP - STANDARD - 2400# RATED MAX LOAD - 4000# VEHICLE LOAD | 1 ea | $501 | OPT |
| RAMP DOOR EXTERIOR - REAR - COLOR MATCHED | 1 ea | | OPT |
| TRANSITION FLAP - TPO - GRAY COIN - 18"L | 1 ea | | STD |
| RAMP DOOR FLOORING - REAR - TPO - GRAY COIN | 1 ea | $324 | OPT |
| DOOR LATCH - BAR LOCK - ALUMINUM | 1 pr | | STD |
| HASP - STAINLESS STEEL - FOR CAM BARS/BAR LOCKS ON RAMP DOOR | 1 pr | | OPT |
| DOOR - ENTRANCE - 405 SERIES - 32" X 78" - FLUSH LOCK<br>• RIGHT HINGE | 1 ea | | STD |
| GAS SHOCK ON ENTRANCE DOOR | 1 ea | $92 | OPT |
| STEP - SLIDE IN/OUT - ALUMINUM - 32" | 1 ea | $372 | OPT |
| DOOR - ENTRANCE - 405 SERIES - 32" X 78" - FLUSH LOCK<br>• RIGHT HINGE | 1 ea | $890 | OPT |
| DOOR ACCESSORIES - ADD TINTED WINDOW TO ENTRANCE DOOR | 1 ea | $108 | OPT |
| GAS SHOCK ON ENTRANCE DOOR | 1 ea | $92 | OPT |

| | | | |
|---|---|---|---|
| STEP - SLIDE IN/OUT - ALUMINUM - 32" | 1 ea | $372 | OPT |
| DOOR ACCESSORIES - ADD TINTED WINDOW TO ENTRANCE DOOR | 1 ea | $108 | OPT |
| DOOR - FUEL - CAST ALUMINUM - LOCKABLE | 1 ea | | OPT |
| **INTERIOR** | | | |
| INTERIOR HEIGHT - 7.0' | 24 ft | $480 | OPT |
| CABINET CONFIGURATION - B0-100"W - #107<br>• CABINET COLOR: POLAR WHITE<br>• CABINET - ALUMINUM - UPPER - STRAIGHT - FULL WIDTH - W/ RADIUS LOWER EDGE - TOP HINGED DOORS AND GAS SHOCKS | 1 ea | $1,316 | OPT |
| CABINET - ALUMINUM - FURNACE | 1 ea | $483 | OPT |
| COUNTERTOP - LAMINATE - FIXED - 84"W X 24"D<br>• INCLUDES SPEED BRACES | 1 ea | $469 | OPT |
| COUNTERTOP - LAMINATE - FIXED - 96"W X 24"D<br>• INCLUDES SPEED BRACES | 1 ea | $508 | OPT |
| INTERIOR CEILING - SCREWLESS ALUMINUM<br>• COVE COLOR: POLAR WHITE<br>• CEILING COLOR: POLAR WHITE (STANDARD)<br>• SPRING BOX COLOR: POLAR WHITE | 24 ft | $552 | OPT |
| INSULATION - CEILING - CLOSED CELL - 1" - R-6.5 | 24 ft | $816 | OPT |
| INTERIOR WALLS - SCREWLESS ALUMINUM<br>• WALL COLOR: POLAR WHITE (STANDARD) | 24 ft | $768 | OPT |
| INSULATION - WALLS - CLOSED CELL - 1" - R-6.5<br>• BUBBLE FOIL R-0 INSULATION BETWEEN WALL CROSS MEMBERS WHERE WIRING PRESENT<br>• NOT RECOMMENDED FOR COLD TEMPERATURES | 24 ft | $1,560 | OPT |
| FLOORING - TPO - GRAY COIN | 24 ft | $1,580 | OPT |
| FIRE EXTINGUISHER - 2.5# BC | 1 ea | $51 | PKG |
| SMOKE DETECTOR | 1 ea | $21 | PKG |
| CO DETECTOR | 1 ea | $51 | PKG |
| LP DETECTOR | 1 ea | $64 | PKG |
| SOFA - FOLD UP SLEEPER - 7' - BLACK | 2 ea | $1,554 | OPT |
| TABLE - CONFERENCE - LAMINATE - REMOVABLE - 36" X 72"<br>• INCLUDES WALL STORAGE<br>• INCLUDES 4 REMOVABLE TABLE LEGS | 1 ea | $1,728 | OPT |
| D-RINGS - 5000# - RECESSED | 6 ea | $264 | OPT |
| WHEEL BOX - SMOOTH AL | 2 ea | | STD |
| **ELECTRICAL** | | | |
| BATTERY - 12V AGM (930 CA, 775 CCA) | 1 ea | $266 | PKG |
| BATTERY - 12V AGM (930 CA, 775 CCA)<br>• ISOLATED TO GENERATOR ONLY | 1 ea | $266 | OPT |
| BREAKER BOX - 50 AMP - 120V ONLY - 60 AMP CONVERTER - 12V FUSE PANEL - INTELI-POWER UNIT | 1 ea | $850 | PKG |
| SWITCH - POWER CUT-OFF - MANUAL - 12V | 1 ea | $106 | PKG |
| POWER INLET - MOTORBASE - 50A - W/ SHORE CORD - 25' | 1 ea | | PKG |
| LIGHT - CLEARANCE - LED - 12V - AMBER - LOWER | 4 ea | | STD |
| LIGHT - CLEARANCE - LED - 12V - AMBER - UPPER | 9 ea | | STD |
| LIGHT - CLEARANCE - LED - 12V - RED - LOWER | 2 ea | | STD |
| LIGHT - CLEARANCE - LED - 12V - RED - UPPER | 7 ea | | STD |
| LIGHT - TAILLIGHT - SLIMLINE - LED - 12V - RED | 1 pr | | STD |
| LIGHT - TAILLIGHT - SLIMLINE - LED - 12V - RED | 1 pr | $175 | OPT |
| LIGHT - ANGLED LOADING - LED - 18" - 12V - EXTERIOR | 1 pr | $215 | OPT |
| SWITCH - WALL - 12V | 1 ea | $38 | OPT |

- USED FOR: LIGHT - ANGLED LOADING - LED - 18" - 12V - EXTERIOR

| | | | |
|---|---|---|---|
| LIGHT - SCENE - LED - HIGH OUTPUT - 12V - NON RECESSED - 7" X 3" - CHROME BEZEL | 5 ea | $1,425 | OPT |
| SWITCH - WALL - 12V<br>• USED FOR: Exterior Scene Lights | 3 ea | $114 | OPT |
| RECEPT - INTERIOR - 120V - 15A<br>• GFCI PROTECTED WHERE REQUIRED BY CODE | 6 ea | $312 | PKG |
| RECEPT - EXTERIOR - 120V - 15A - GFI PROTECTED | 3 ea | $207 | OPT |
| RECEPT - INTERIOR - 120V - 15A - USB<br>• GFCI PROTECTED WHERE REQUIRED BY CODE<br>• INCLUDES: 2 USB CHARGING PORTS | 6 ea | $618 | OPT |
| LIGHT - RECTANGULAR - LED - 14" - 12V - SURFACE MOUNT | 4 ea | $548 | PKG |
| SWITCH - WALL - 12V<br>• USED FOR: LIGHT - RECTANGULAR - LED - 14" - 12V - SURFACE MOUNT | 1 ea | $38 | OPT |
| LIGHT - RECTANGULAR - LED - 14" - 12V - SURFACE MOUNT | 4 ea | $548 | OPT |
| SWITCH - WALL - 12V<br>• USED FOR: LIGHT - RECTANGULAR - LED - 14" - 12V - SURFACE MOUNT | 1 ea | $38 | OPT |
| WIRING - STUB WIRE - 12V - TEW 14/2 | 4 ea | $158 | OPT |
| GENERATOR - COMMERCIAL - 5.5 KW ONAN - GAS - (120V / 240V) | 1 ea | $5,992 | OPT |
| REMOTE START | 1 ea | | PKG |
| FUEL GAUGE | 1 ea | | OPT |
| GENERATOR COMPARTMENT - TONGUE MOUNTED - ATP<br>• EXPANDED METAL ON FLOOR OF COMPARTMENT<br>• INCLUDES 405 SERIES DOUBLE DOORS - VENTED<br>• INCLUDES GALVANIZED LINER FOR FRONT WALL OF TRAILER ONLY<br>• GEN BOX & DOORS BUILT TO FIT SPECIFIC SIZE OF GEN<br>• DOES NOT INCLUDE INSULATION | 1 ea | $919 | OPT |
| TRANSFER SWITCH - AUTO - 50A | 1 ea | | OPT |
| **PLUMBING & LP** | | | |
| LP TANKS - (2) - 20# - W/ RV TRAY AND MOUNTING BRACKETS | 1 ea | $702 | OPT |
| **HEATING & AIR CONDITIONING** | | | |
| A/C - 13,500 BTU - LOW PROFILE - 10.5" - WHITE - W/ MANUAL CONTROLS | 1 ea | $1,496 | OPT |
| FURNACE - DUCTED - 25000 BTU - LP<br>• DUCTING FOR FURNACE THROUGH CABINETS<br>• THERMOSTAT INCLUDED | 1 ea | $854 | OPT |
| **DEALER CUSTOM OPTIONS** | | | |
| Antenna Rail Installed<br>Includes Weatherproof Roof Mounted Junction Box | 1 ea | $594 | |
| **UNAPPROVED CUSTOM OPTIONS** | | | |
| CABINET - ALUMINUM - STAND ALONE - 24"W X 84"H X 18"D - (4) FIXED SHELVES<br>-INCLUDES (4) FIXED SHELVES<br>Ref 116404<br>CK 1/8/2019 | 1 ea | $1,196 | |
| DOOR - ACCESS - 405 SERIES - 18" X 12" - TOP HINGE<br>Ref 115436<br>CK 1/8/2019 | 1 ea | $342 | |
| OUTLET - COAX - EXTERIOR TO INTERIOR | 4 ea | $520 | |
| SWITCH - WALL - 12V | 1 ea | $38 | |
| **TOTALS** | | | |
| | Subtotal | $53,566.00 | |
| | Total | $53,566.00 | |

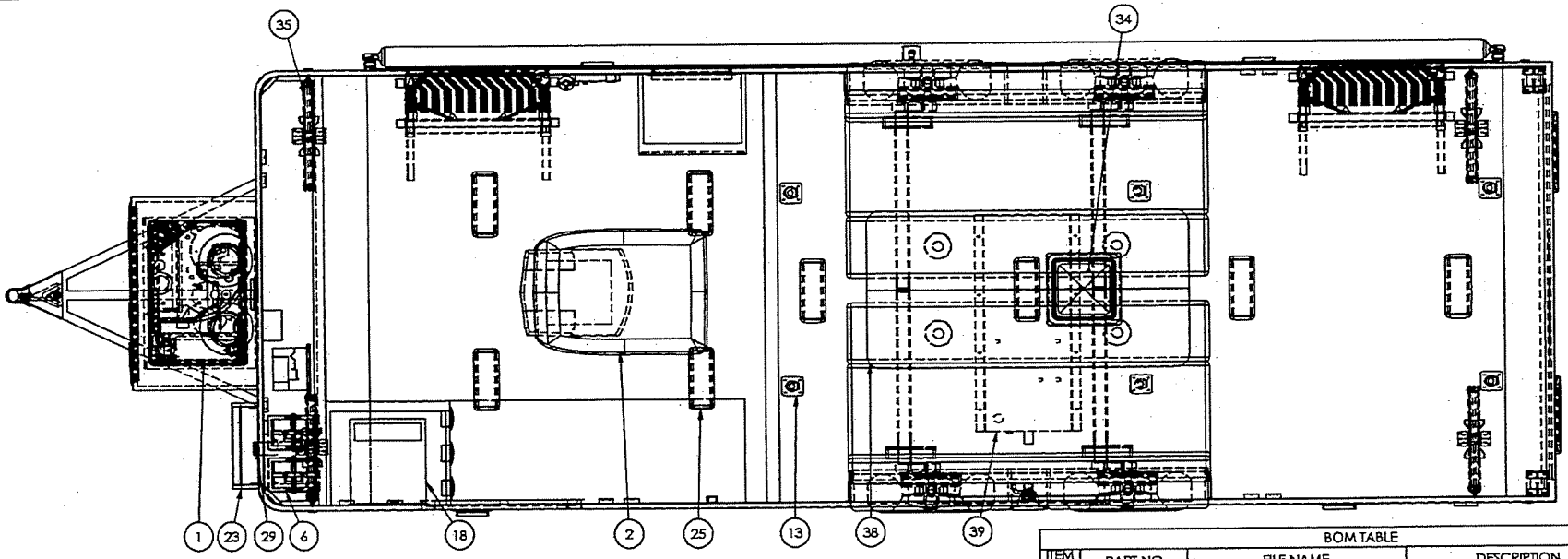


| BOM TABLE | | | | |
|---|---|---|---|---|
| ITEM NO | PART NO | FILE NAME | DESCRIPTION | QTY |
| 1 | | 5.5 KW ONAN GAS | 5.5 KW ONAN GAS | 1 |
| 2 | | AIR CONDITIONER | 13,500 BTU - LOW PROFILE - 10.5 (3) | 1 |
| 3 | | AWNING | 21" POWER | 1 |
| 4 | | AWNING SUPPORT, CENTER | | 1 |
| 5 | | AXLE - TORSION-SIMPLIFIED | 5200#, HF-94 OB-78, 10.0" Up | 2 |
| 6 | | BATTERY | AGM, 775 CCA | 2 |
| 7 | | BOGEY WHEEL | | 2 |
| 8 | 48260 | BREAKER BOX | 50 AMP WITH CONVERTER | 1 |
| 12 | 70395/70485 | COUPLER - A-FRAME | 10K - 2 5/16" BALL | 1 |
| 13 | 90971 | D-RING - RECESSED | 5,000# | 6 |
| 16 | | FIRE EXTINGUISHER | | 1 |
| 17 | | FUEL FILL | | 1 |
| 18 | | FURNACE | 25K BTU (SF-25) | 1 |
| 19 | | FURNACE CABINET | | 1 |
| 20 | | GEN COMPARTMENT - TONGUE | | 1 |
| 21 | | GEN START, FUEL GAUGE | | 1 |
| 22 | | JACK - TONGUE | 5K - TOP WIND | 1 |
| 23 | | LADDER, STRAIGHT-217786 | | 1 |
| 24 | | LIGHT - ANGLED LOADING | | 2 |
| 25 | | LIGHT, CEILING - SURFACE MOUNT | | 8 |
| 26 | 99896 | LIGHT, LED SCENE | 12V-24V - 45dgr ANGLE | 5 |
| 27 | | LP DETECTOR | | 1 |
| 28 | | LP TANKS | (2) 20# TANKS | 1 |
| 29 | | MOTORBASE | 50 AMP | 1 |
| 30 | | OUTLET, ELECTRICAL | 120V 15A EXTERIOR | 3 |
| 31 | 11978 | OUTLET, ELECTRICAL | 120V 15A INTERIOR | 6 |
| 32 | | OUTLET, ELECTRICAL | 120V 15A INTERIOR-USB | 6 |
| 33 | | OUTLET, ELECTRICAL | 12V STUB WIRES | 4 |
| 34 | | ROOF VENT | VENT - ROOF - 12V FANTASTIC FAN | 1 |
| 35 | | SCISSOR JACK | 24"- 5000# | 4 |
| 36 | | SOFA, ROLLOVER | 84 W | 2 |
| 37 | | STEP ASSY, AL - SLIDE IN-OUT | | 1 |
| 38 | | TABLE, REMOVABLE | | 1 |
| 39 | | TANK, FUEL | 28 GAL END FILL(ST24-11)G | 1 |
| 40 | | TIRES | 225/75/15 | 4 |
| 41 | | TRANSFER SWITCH | 50 AMP | 1 |
| 42 | | TUBE BACKER CEILING-217786 | | 1 |
| 43 | | VENT, ROUND | | 3 |
| 44 | | WHEEL WELL - AL | 7.5 x 13.0 x 80.0 | 2 |
| 45 | | WINDOW | 36" x 24" | 1 |

**ATTENTION:**
**ATC IS NOT RESPONSIBLE FOR CLEARANCE OF VEHICLE UNTIL CUSTOMER/DEALER COMPLETES VEHICLE CLEARANCE FORM AND IS VERIFIED BY ATC ENGINEERING DEPARTMENT.**

**DIMENSIONS ARE NOMINAL. STRUCTURAL MEMBERS OFTEN DICTATE WHERE INTERIOR FEATURES CAN BE PLACED. CONSEQUENTLY, SOME DIMENSIONED ITEMS RETAIN A +/- 2" TOLERANCE. CRITICAL (BUBBLED) DIMENSIONS WILL RETAIN A TOLERANCE OF +/- 1/4".**

**ALL LOCATIONS ARE NOMINAL UNLESS CRITICAL DIMENSIONS ARE SPECIFICALLY NOTED**

PROPRIETARY AND CONFIDENTIAL:
THE INFORMATION CONTAINED IN THIS DRAWING IS THE SOLE PROPERTY OF THE ALUMINUM TRAILER COMPANY. ANY REPRODUCTION IN PART OR AS A WHOLE WITHOUT THE WRITTEN PERMISSION OF THE ALUMINUM TRAILER COMPANY IS PROHIBITED.

WORLD CLASS TRAILERS

TITLE: 8.5' x 24' QUEST STEEL BP

| DRAWN BY: | DATE: | VIN/PART # | REV. |
|---|---|---|---|
| HTY | 01/28/19 | 217786 | |

FILE NAME: DW-8P 8524-Advantage_BSB-217786

SCALE:1:18 | DATE PRINTED: 1/29/2019 | SHEET 1 OF 6

REVISION TABLE

| REV. | DESCRIPTION | DATE | DONE BY |
|---|---|---|---|

DWG PATH: C:\Eng_Vault\Master Records\VIN\217 VINS\217786\

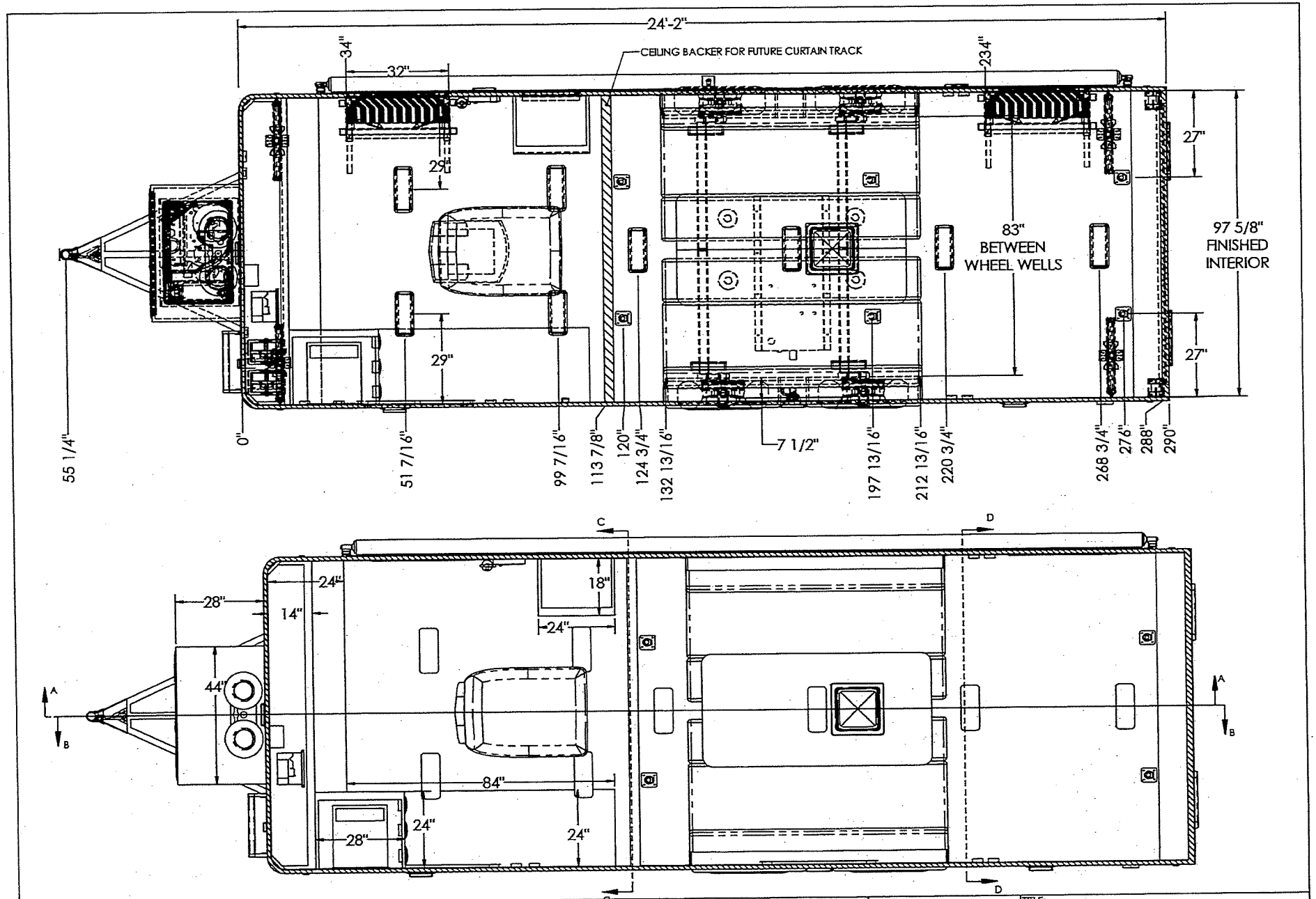


**ALL LOCATIONS ARE NOMINAL UNLESS CRITICAL DIMENSIONS ARE SPECIFICALLY NOTED**

PROPRIETARY AND CONFIDENTIAL:
THE INFORMATION CONTAINED IN THIS DRAWING IS THE SOLE PROPERTY OF THE ALUMINUM TRAILER COMPANY. ANY REPRODUCTION IN PART OR AS A WHOLE WITHOUT THE WRITTEN PERMISSION OF THE ALUMINUM TRAILER COMPANY IS PROHIBITED.

ATC WORLD CLASS TRAILERS

TITLE: 8.5' x 24' QUEST STEEL BP

| DRAWN BY: | DATE: | VIN/PART # | REV. |
|---|---|---|---|
| HTY | 01/28/19 | 217786 | |

FILE NAME: DW-BP 8524-Advantage_BSB-217786

SCALE:1:19 | DATE PRINTED: 1/29/2019 | SHEET 2 OF 6

DWG PATH: C:\Eng_Vault\Master Records\VIN\217 VINS\217786\

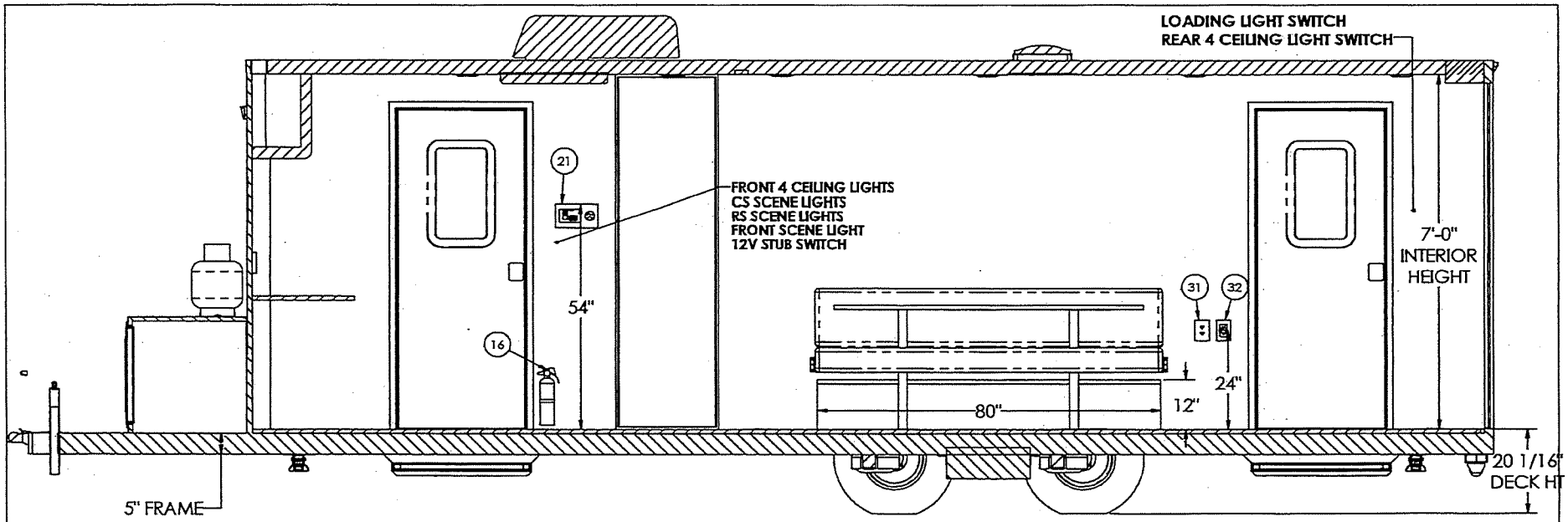


**INTERIOR CURB SIDE**

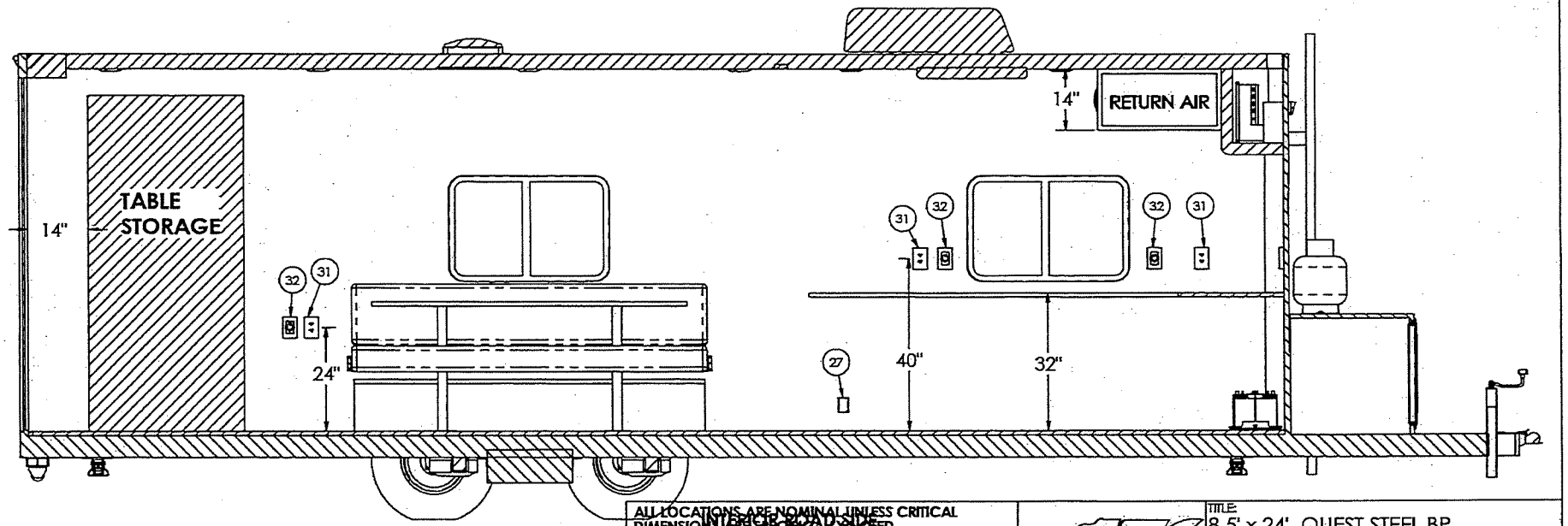


ALL LOCATIONS ARE NOMINAL UNLESS CRITICAL DIMENSIONS ARE SPECIFICALLY NOTED

PROPRIETARY AND CONFIDENTIAL:
THE INFORMATION CONTAINED IN THIS DRAWING IS THE SOLE PROPERTY OF THE ALUMINUM TRAILER COMPANY. ANY REPRODUCTION IN PART OR AS A WHOLE WITHOUT THE WRITTEN PERMISSION OF THE ALUMINUM TRAILER COMPANY IS PROHIBITED.

ATC WORLD CLASS TRAILERS

TITLE: 8.5' x 24' QUEST STEEL BP

| DRAWN BY: | DATE: | VIN/PART # | REV. |
|---|---|---|---|
| HTY | 01/28/19 | 217786 | |

FILE NAME: DW-BP 8524-Advantage_BSB-217786

SCALE:1:17 | DATE PRINTED: 1/29/2019 | SHEET 3 OF 6

DWG PATH: C:\Eng_Vault\Master Records\VIN\217 VINS\217786\

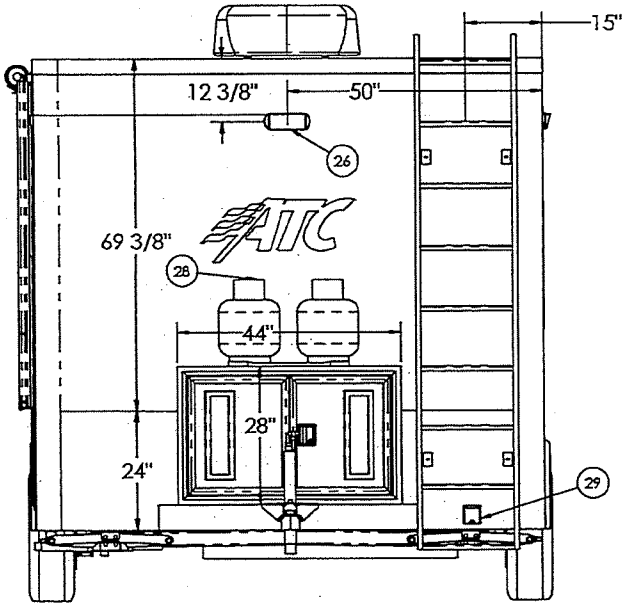


**EXTERIOR FRONT**

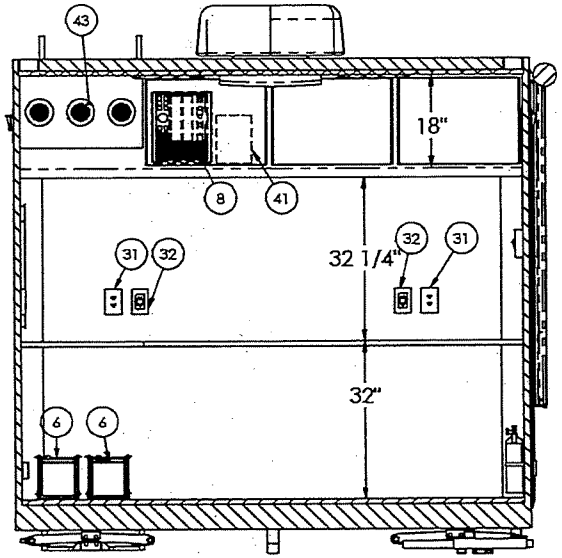


**INTERIOR FRONT**

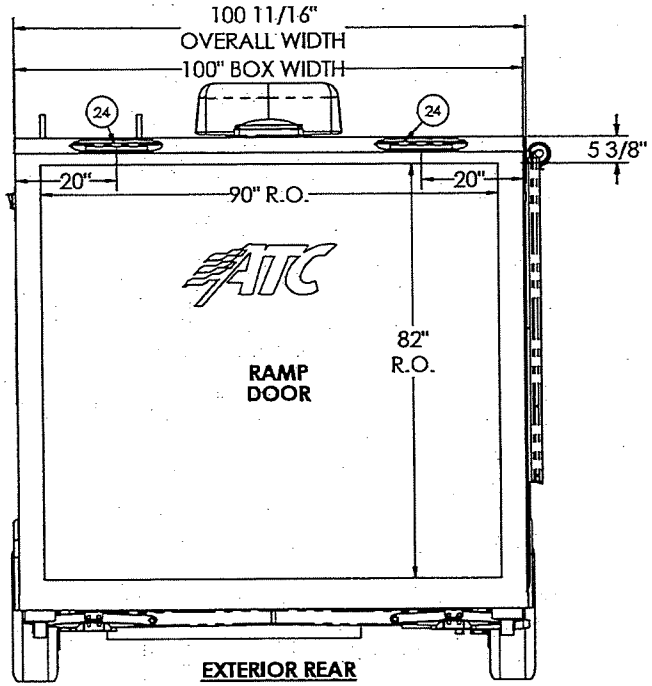


**EXTERIOR REAR**

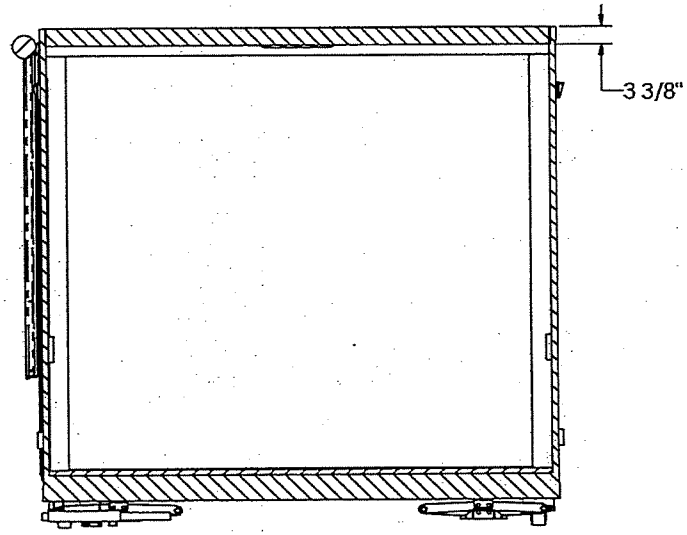


**INTERIOR REAR**

**ALL LOCATIONS ARE NOMINAL UNLESS CRITICAL DIMENSIONS ARE SPECIFICALLY NOTED**

PROPRIETARY AND CONFIDENTIAL:
THE INFORMATION CONTAINED IN THIS DRAWING IS THE SOLE PROPERTY OF THE ALUMINUM TRAILER COMPANY. ANY REPRODUCTION IN PART OR AS A WHOLE WITHOUT THE WRITTEN PERMISSION OF THE ALUMINUM TRAILER COMPANY IS PROHIBITED.

WORLD CLASS TRAILERS

| | | | |
|---|---|---|---|
| TITLE: 8.5' x 24' QUEST STEEL BP | | | |
| DRAWN BY: HTY | DATE: 01/28/19 | VIN/PART # 217786 | REV. |
| FILE NAME: DW-BP 8524-Advantage_BSB-217786 | | | |
| SCALE:1:17 | DATE PRINTED: 1/29/2019 | SHEET 4 OF 6 | |

DWG PATH: C:\Eng Vault\Master Records\VIN\217 VINS\217786\

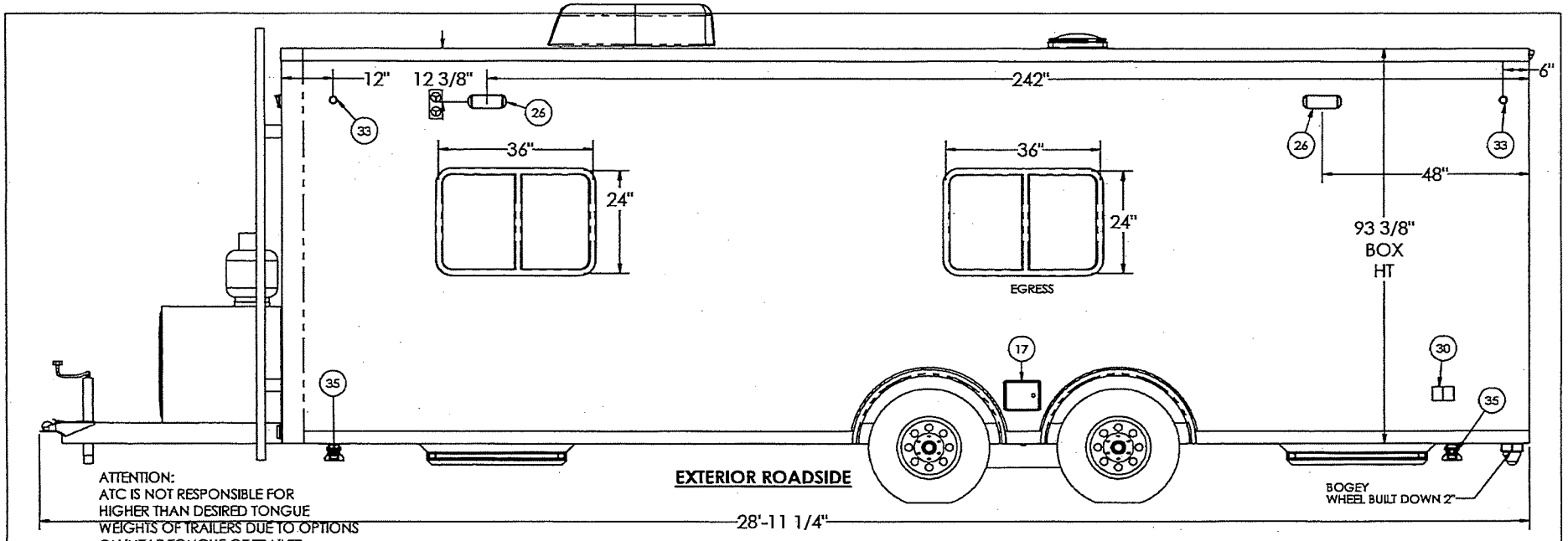


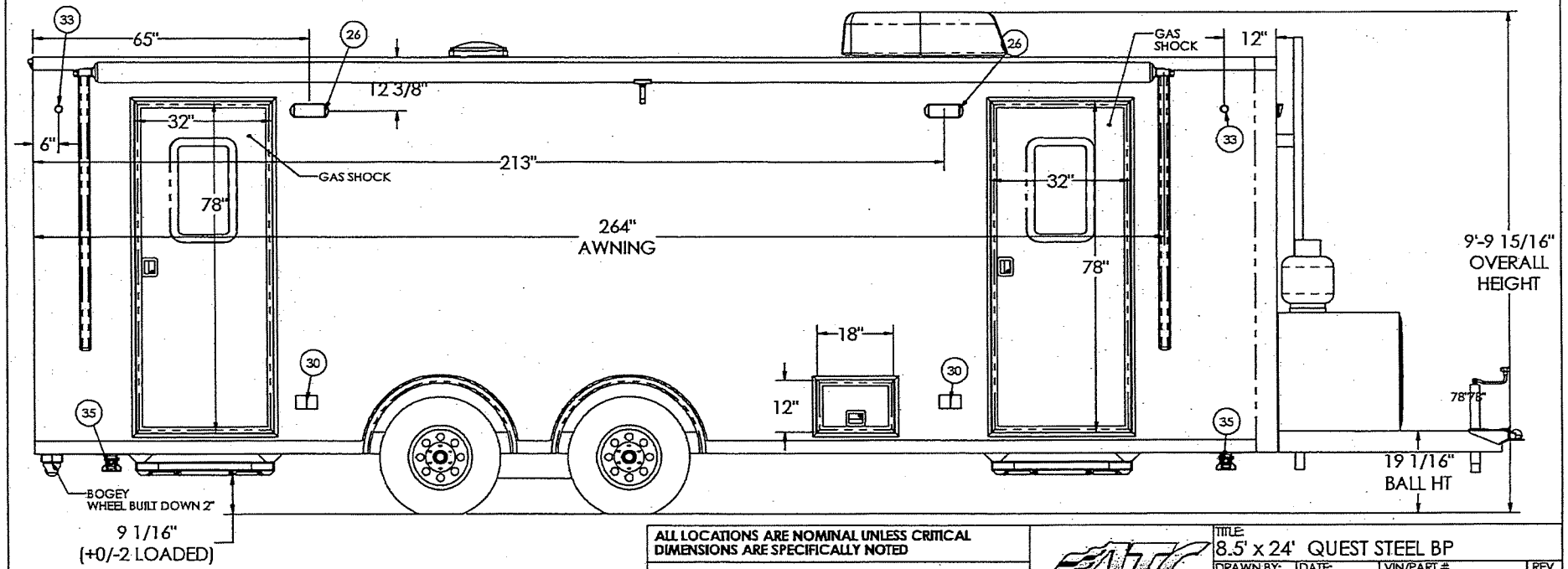


**ALL LOCATIONS ARE NOMINAL UNLESS CRITICAL DIMENSIONS ARE SPECIFICALLY NOTED**

PROPRIETARY AND CONFIDENTIAL:
THE INFORMATION CONTAINED IN THIS DRAWING IS THE SOLE PROPERTY OF THE ALUMINUM TRAILER COMPANY. ANY REPRODUCTION IN PART OR AS A WHOLE WITHOUT THE WRITTEN PERMISSION OF THE ALUMINUM TRAILER COMPANY IS PROHIBITED.

ATC WORLD CLASS TRAILERS

TITLE: 8.5' x 24' QUEST STEEL BP

| DRAWN BY: | DATE: | VIN/PART # | REV. |
|---|---|---|---|
| HTY | 01/28/19 | 217786 | |

FILE NAME: DW-BP 8524-Advantage_BSB-217786

SCALE:1:17 | DATE PRINTED: 1/29/2019 | SHEET 5 OF 6

DWG PATH: C:\Eng_Vault\Master Records\VIN\217 VINS\217786\

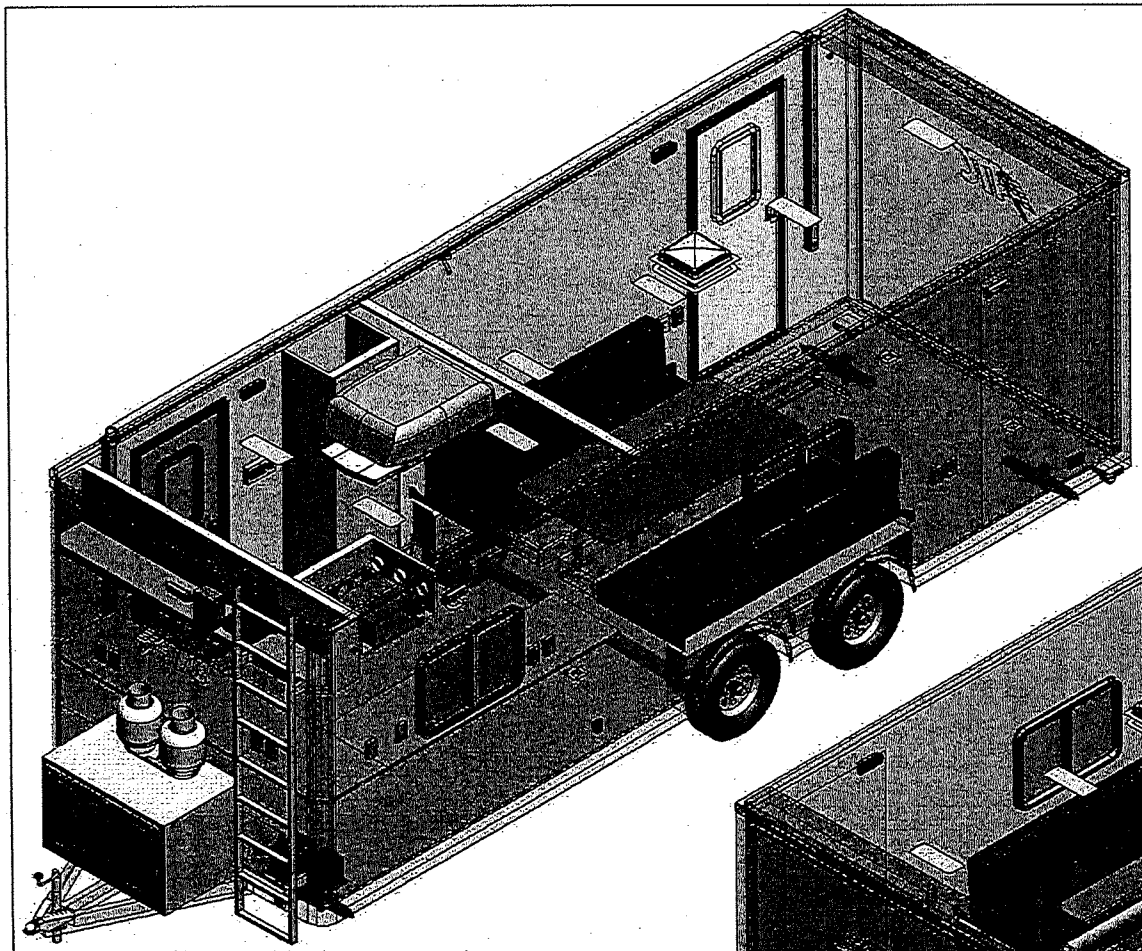

ROAD SIDE VIEW

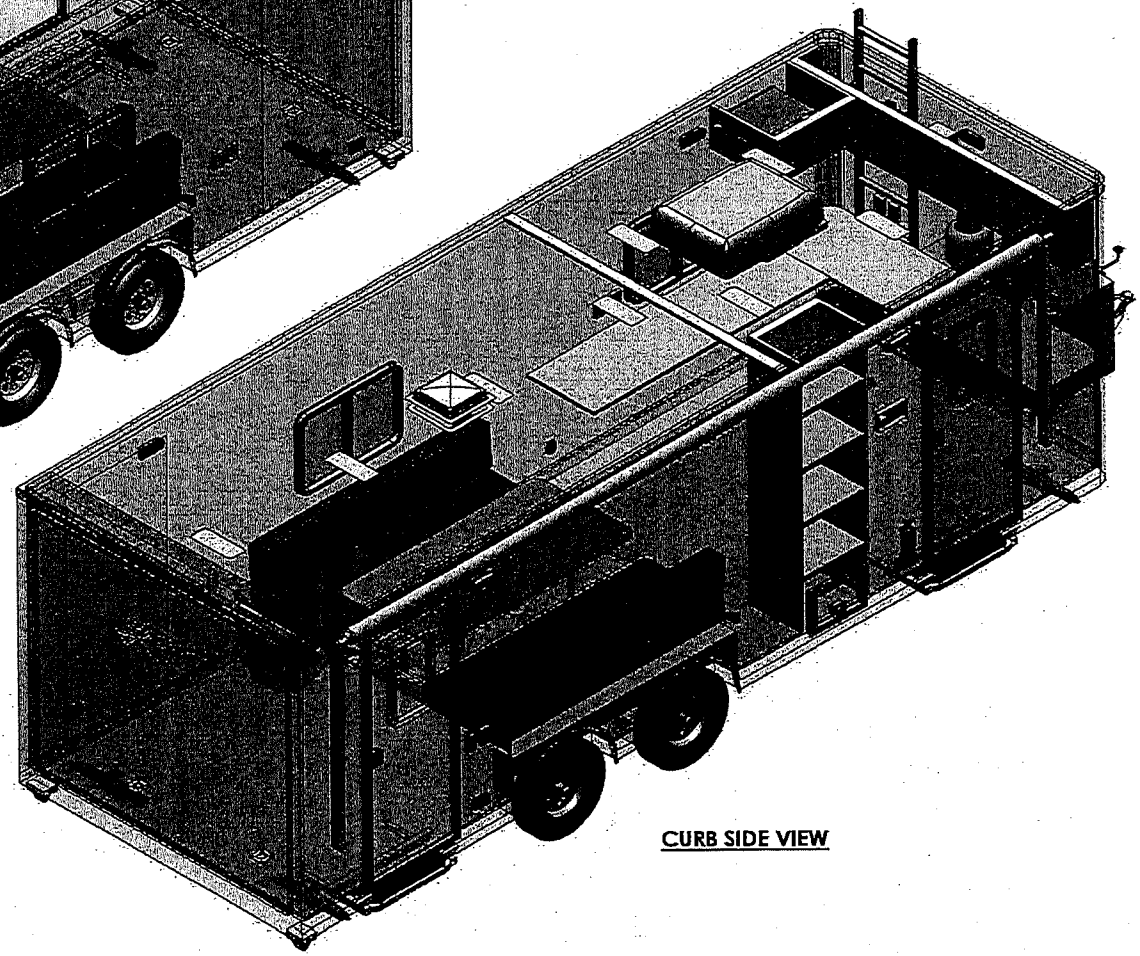

CURB SIDE VIEW

**ALL LOCATIONS ARE NOMINAL UNLESS CRITICAL DIMENSIONS ARE SPECIFICALLY NOTED**

PROPRIETARY AND CONFIDENTIAL:
THE INFORMATION CONTAINED IN THIS DRAWING IS THE SOLE PROPERTY OF THE ALUMINUM TRAILER COMPANY. ANY REPRODUCTION IN PART OR AS A WHOLE WITHOUT THE WRITTEN PERMISSION OF THE ALUMINUM TRAILER COMPANY IS PROHIBITED.

ATC WORLD CLASS TRAILERS

| TITLE: 8.5' x 24' QUEST STEEL BP | | | |
|---|---|---|---|
| DRAWN BY: HTY | DATE: 01/28/19 | VIN/PART #: 217786 | REV. |
| FILE NAME: DW-BP 8524-Advantage_BSB-217786 | | | |
| SCALE:1:22 | DATE PRINTED: 1/29/2019 | SHEET 6 OF 6 | |

DWG PATH: C:\Eng_Vault\Master Records\VIN\217 VINS\217786\

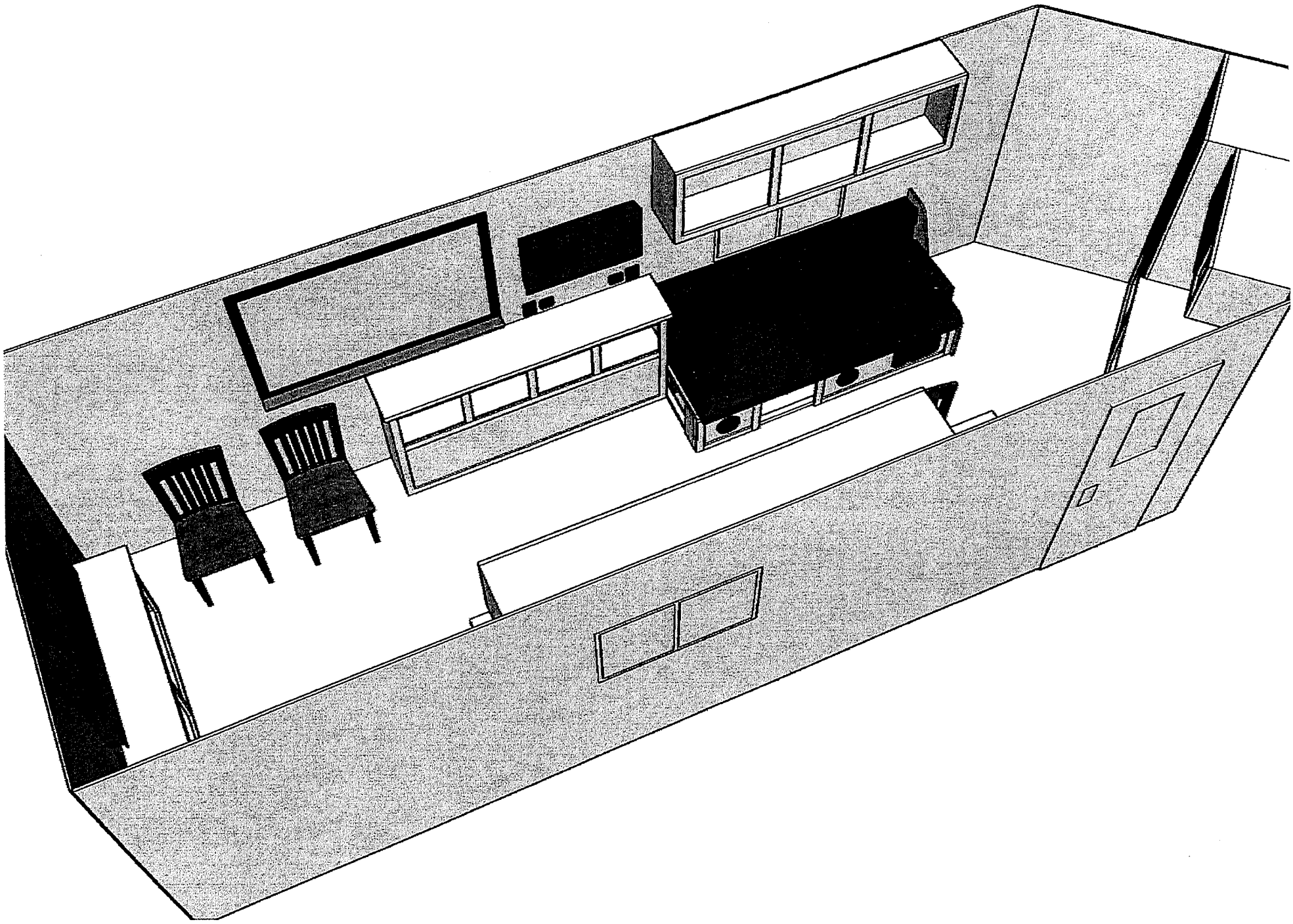

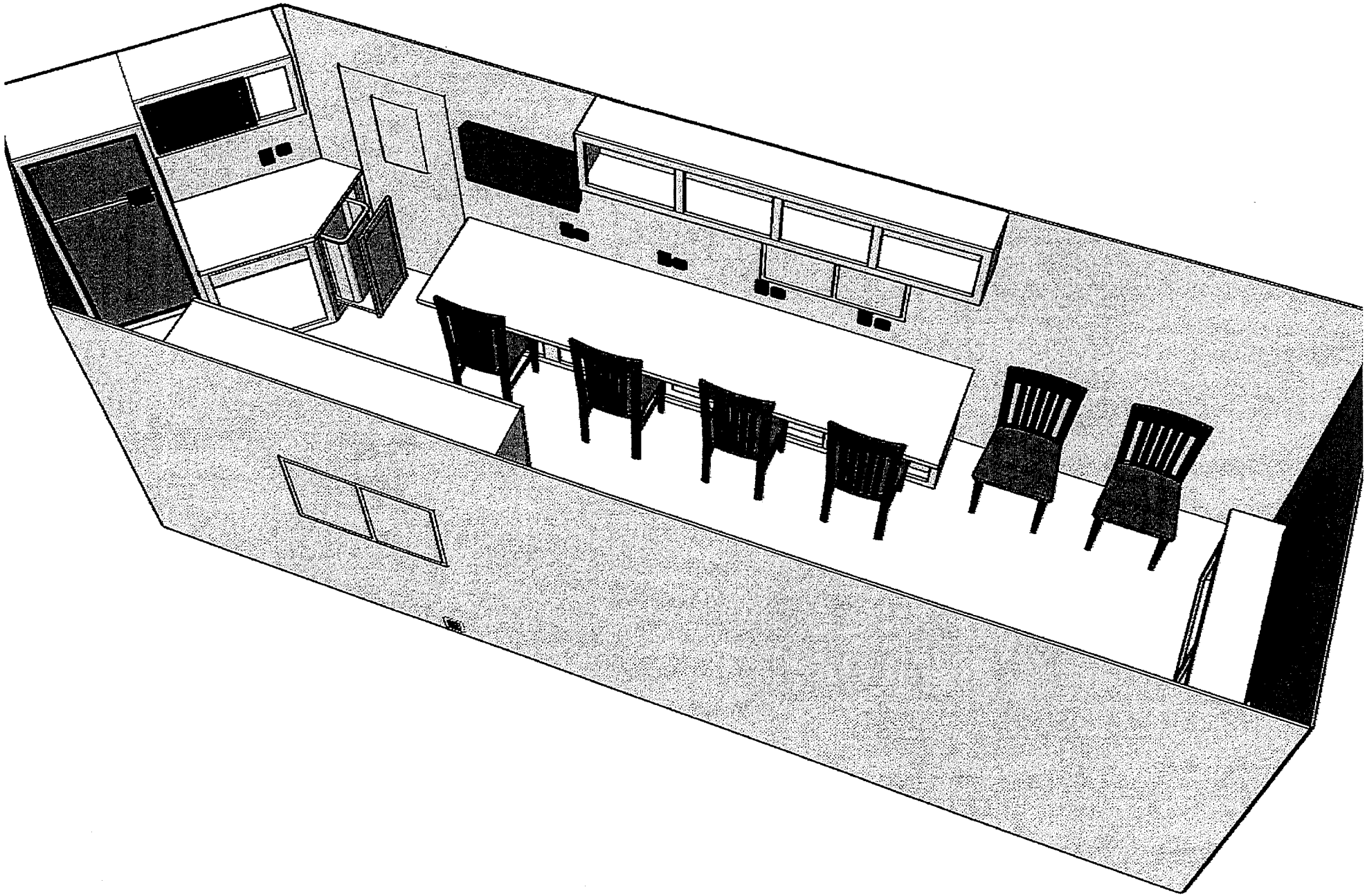

RESOLUTION OF THE POLK COUNTY
BOARD OF COMMISSIONERS

**Resolution Accepting Financial Donations On Behalf Of Polk County Sheriff's Office From The City of Climax In Memory Of Gary Letness**

**RESOLUTION (2020-32)**

The following resolution (2020-32) was offered by Commissioner:

WHEREAS, City of Climax has made a financial donation of $100.00 in memory of Gary Letness to support the Polk County K9 Program in Polk County; and

WHEREAS, Polk County Sheriff's Office, wishes to have the County Board formally accept the financial donation on behalf of Polk County Sheriff's Office and put towards the Polk County K9 Program.

NOW THEREFORE BE IT RESOLVED, By the County Board of Polk County, Minnesota as follows:

1. The financial donations from the City of Climax in memory of Gary Letness, which is listed above, hereby are accepted by the Polk County Board of Commissioners on behalf of the Polk County Sheriff's Office and used for Polk County K9 Program.

Commissioner seconded the foregoing resolution and it was declared adopted upon the following vote. YEAS: NAYS:

STATE OF MINNESOTA )
) ss
COUNTY OF POLK )

I, Charles S. Whiting, County Administrator to and Clerk of the Polk County Board of Commissioners do hereby certify that I have compared the foregoing resolution with the original resolution filed in my office on the 24th day of March, 2020, and that the same is a true and correct copy of the whole thereof.

WITNESS my hand and Official Seal of Polk County at Crookston, Minnesota this 24th day of March, 2020.

_____
Charles S. Whiting, County Administrator
Clerk of the Board

RESOLUTION OF THE POLK COUNTY
BOARD OF COMMISSIONERS

**Resolution Accepting Financial Donations On Behalf Of Polk County Sheriff's Office From Kustom Kollision, LLC, Crookston, MN**

**RESOLUTION (2020-33)**

The following resolution (2020-33) was offered by Commissioner:

WHEREAS, Kustom Kollision LLC, Crookston, MN made a financial donation of $500.00 to support the Polk County K9 Program in Polk County; and

WHEREAS, Polk County Sheriff's Office, wishes to have the County Board formally accept the financial donation on behalf of Polk County Sheriff's Office and put towards the Polk County K9 Program.

NOW THEREFORE BE IT RESOLVED, By the County Board of Polk County, Minnesota as follows:

1. The financial donations from Kustom Kollision LLC, Crookston, MN which is listed above, hereby are accepted by the Polk County Board of Commissioners on behalf of the Polk County Sheriff's Office and used for Polk County K9 Program.

Commissioner seconded the foregoing resolution and it was declared adopted upon the following vote. YEAS: NAYS:

STATE OF MINNESOTA )
) ss
COUNTY OF POLK )

I, Charles S. Whiting, County Administrator to and Clerk of the Polk County Board of Commissioners do hereby certify that I have compared the foregoing resolution with the original resolution filed in my office on the 24th day of March, 2020, and that the same is a true and correct copy of the whole thereof.

WITNESS my hand and Official Seal of Polk County at Crookston, Minnesota this 24th day of March, 2020.

_____
Charles S. Whiting, County Administrator
Clerk of the Board

| | February | | | | | | | | | | |
|---|---|---|---|---|---|---|---|---|---|---|---|
| Date: | Reason | Mileage | Deputy/Deputies | Medical | Mental Health | MN Prison/Jails | Out of state | ME | Federal | Other | Hours |
| 1 | 540 | 48 | 5006 | | | | | | | 48 | 1.25 |
| 3 | RRVJDC to court | 1 | 5005 | | | | | | | 1 | 2.25 |
| 4 | Hubbard Co on 10-69 | 230 | 5013 | | | 230 | | | | | 4.25 |
| 5 | St Cloud/Shakopee | 697 | 5005/5008 | | | 697 | | | | | 30.5 |
| 6 | CBHH Bemidji | 177 | 5013 | | 177 | | | | | | 4 |
| 6 | Clay County on 10-69 | 140 | 5013 | | | 140 | | | | | 3 |
| 7 | Beltrami on 10-69 | 178 | 5019 | | | 178 | | | | | 3.25 |
| 9 | 540 | 24 | 5032 | | | | | | | 24 | 1.25 |
| 10 | RRVJDC to court | 1 | 5028 | | | | | | | 1 | 0.75 |
| 11 | MCF St Cloud | 488 | 5008/5019 | | | 488 | | | | | 20 |
| 11 | GF County on 10-69 | 29 | 5005 | | | | 29 | | | | 1 |
| 12 | Jamestown on MCF transfer | 366 | 5021 | | | | 366 | | | | 6.25 |
| 13 | MCF St Cloud | 465 | 5008 | | | 465 | | | | | 7.75 |
| 13 | Bottineau ND on 10-69 | 411 | 5005 | | | | 411 | | | | 7 |
| 14 | St Peter Mental Health | 645 | 5019 | | 645 | | | | | | 13.5 |
| 14 | RRVJDC to court | 1 | 5028 | | | | | | | 1 | 0.75 |
| 17 | 540 | 48 | 5010 | | | | | | | 48 | 1.5 |
| 18 | MCF St Cloud/Shakopee | 640 | 5008/5013 | | | 640 | | | | | 24 |
| 18 | Beltrami on 10-69 | 177 | 5019 | | | 177 | | | | | 3.75 |
| 19 | 540 | 24 | 5005 | | | | | | | 24 | 2 |
| 19 | RRVJDC to court | 1 | 5028 | | | | | | | 1 | 2.25 |
| 19 | RRVJDC to court | 1 | 5021 | | | | | | | 1 | 1.75 |
| 19 | Juvenile to Bemidji | 177 | 5028 | | | 177 | | | | | 3.25 |
| 20 | Ottertail Co on 10-69 | 271 | 5008 | | | 271 | | | | | 5.75 |
| 21 | GF County on 10-69 | 54 | 5028 | | | | 54 | | | | 1.75 |
| 24 | Bemidji Juvenile and back | 356 | 5021 | | | 356 | | | | | 7.75 |
| 24 | RRVJDC to court | 1 | 5008 | | | | | | | 1 | 1 |
| 25 | MCF St Cloud | 468 | 5008 | | | 468 | | | | | 6.5 |
| 25 | Pennington on 10-69 | 83 | 5013 | | | 83 | | | | | 1.75 |
| 25 | NWRCC to Riverview | 2 | 5003 | 2 | | | | | | | 2 |
| 26 | 540 | 24 | 5005 | | | | | | | 24 | 1.25 |
| 26 | Pennington on 10-69 | 85 | 5028 | | | 85 | | | | | 2.5 |
| 26 | RRVJDC to court | 1 | 5019 | | | | | | | 1 | 0.75 |
| 27 | Cass ND on 10-69 | 164 | 5013 | | | | 164 | | | | 3.25 |
| 27 | Grand Forks County on 10-69 | 55 | 5005 | | | | 55 | | | | 1.5 |
| 27 | RRVJDC to court | 1 | 5021 | | | | | | | 1 | 1 |
| 27 | NWRCC to Riverview | 2 | 5029 | 2 | | | | | | | 1 |
| | February Totals | 6536 | | 4 | 822 | 4455 | 1079 | 0 | 0 | 176 | 183 |

# Summary Comparison Transport Log

| | 2018 | 2019 | 2020 | 2021 | 2022 |
|---|---|---|---|---|---|
| | | | | | |
| January | 7318 | 7638 | 9712 | | |
| | | | | | |
| February | 8009 | 7565 | 6536 | | |
| | | | | | |
| March | 8800 | 7314 | | | |
| | | | | | |
| April | 7732 | 8179 | | | |
| | | | | | |
| May | 9707 | 6606 | | | |
| | | | | | |
| June | 8490 | 5965 | | | |
| | | | | | |
| Subtotal | 50056 | 43267 | 16248 | 0 | 0 |
| | | | | | |
| July | 7182 | 11450 | | | |
| | | | | | |
| August | 6855 | 10886 | | | |
| | | | | | |
| September | 8030 | 8251 | | | |
| | | | | | |
| October | 9423 | 14304 | | | |
| | | | | | |
| November | 5378 | 8236 | | | |
| | | | | | |
| December | 9288 | 7567 | | | |
| | | | | | |
| **Totals** | **96212** | **103961** | **16248** | **0** | **0** |

# Summary Comparison Transport Log

| | 2013 | 2014 | 2015 | 2016 | 2017 |
|---|---|---|---|---|---|
| | | | | | |
| **January** | 4507 | 5093 | 9735 | 8421 | 9255 |
| | | | | | |
| **February** | 4696 | 5545 | 5816 | 9321 | 11869 |
| | | | | | |
| **March** | 8652 | 5737 | 8367 | 13085 | 9314 |
| | | | | | |
| **April** | 5103 | 5385 | 9039 | 5719 | 5385 |
| | | | | | |
| **May** | 5871 | 7266 | 6875 | 9299 | 7115 |
| | | | | | |
| **June** | 5736 | 5787 | 7437 | 5961 | 13013 |
| | | | | | |
| Subtotal | **34565** | **34813** | **47269** | **51806** | **55951** |
| | | | | | |
| **July** | 4130 | 7762 | 7097 | 6324 | 8698 |
| | | | | | |
| **August** | 8073 | 8137 | 9799 | 7251 | 10931 |
| | | | | | |
| **September** | 4582 | 6815 | 7076 | 4941 | 7150 |
| | | | | | |
| **October** | 7260 | 7299 | 6417 | 7388 | 7867 |
| | | | | | |
| **November** | 5504 | 7926 | 9251 | 9509 | 10469 |
| | | | | | |
| **December** | 5792 | 9869 | 10015 | 4691 | 5587 |
| | | | | | |
| **Totals** | **69906** | **82621** | **96924** | **91910** | **106653** |

# Transport Log

## Miles Comparison by Categories

| 2020 | Total Miles | Medical Facility | Mental Health | In-State Prison | Out-State Prison | Other Counties | Medical Examiner | Federal Transport |
|---|---|---|---|---|---|---|---|---|
| January | 9712 | 369 | 184 | 4874 | 4055 | 228 | 0 | 2 |
| February | 6536 | 4 | 822 | 4455 | 1079 | 176 | 0 | 0 |
| March | | | | | | | | |
| April | | | | | | | | |
| May | | | | | | | | |
| June | | | | | | | | |
| July | | | | | | | | |
| August | | | | | | | | |
| September | | | | | | | | |
| October | | | | | | | | |
| Novermber | | | | | | | | |
| December | | | | | | | | |
| | | | | | | | | |

| 2021 | Total Miles | Medical Facility | Mental Health | In-State Prison | Out-State Prison | Other Counties | Medical Examiner | Federal Transport |
|---|---|---|---|---|---|---|---|---|
| January | | | | | | | | |
| February | | | | | | | | |
| March | | | | | | | | |
| April | | | | | | | | |
| May | | | | | | | | |
| June | | | | | | | | |
| July | | | | | | | | |
| August | | | | | | | | |
| September | | | | | | | | |
| October | | | | | | | | |
| Novermber | | | | | | | | |
| December | | | | | | | | |
| | | | | | | | | |

# Transport Log

## Miles Comparison by Categories

| 2018 | Total Miles | Medical Hospital | Mental Health | In-State Prison | Out-State Prison | Other | Medical Examiner | Federal Transport |
|---|---|---|---|---|---|---|---|---|
| January | 7318 | 0 | 1997 | 3911 | 891 | 457 | 62 | 0 |
| February | 8009 | 1 | 2258 | 1644 | 3574 | 254 | 278 | 0 |
| March | 8800 | 2 | 425 | 4206 | 3398 | 670 | 64 | 0 |
| April | 7732 | 0 | 453 | 5023 | 1408 | 391 | 108 | 140 |
| May | 9707 | 0 | 1943 | 5297 | 2002 | 464 | 0 | 0 |
| June | 8490 | 3 | 89 | 3518 | 4607 | 273 | 0 | 0 |
| July | 7182 | 74 | 2302 | 4050 | 458 | 298 | 0 | 0 |
| August | 6855 | 7 | 604 | 3549 | 2318 | 366 | 0 | 11 |
| September | 8030 | 13 | 280 | 2952 | 4460 | 325 | 0 | 0 |
| October | 9423 | 10 | 346 | 4585 | 4082 | 400 | 0 | 0 |
| Novermber | 5378 | 10 | 1247 | 3213 | 634 | 269 | 0 | 4 |
| December | 9288 | 7 | 514 | 4297 | 4086 | 227 | 155 | 2 |
| | | | | | | | | |

| 2019 | Total Miles | Medical Hospital | Mental Health | In-State Prison | Out-State Prison | Other Counties | Medical Examiner | Federal Transport |
|---|---|---|---|---|---|---|---|---|
| January | 7638 | 6 | 1231 | 3304 | 2877 | 220 | 0 | 0 |
| February | 7565 | 77 | 620 | 3484 | 2795 | 251 | 0 | 0 |
| March | 7314 | 22 | 97 | 3894 | 2853 | 442 | 0 | 6 |
| April | 8179 | 8 | 454 | 4272 | 2937 | 176 | 0 | 332 |
| May | 6606 | 378 | 867 | 3931 | 1012 | 416 | 0 | 0 |
| June | 5965 | 53 | 846 | 2515 | 2129 | 129 | 291 | 2 |
| July | 11450 | 4 | 1549 | 4595 | 3222 | 738 | 127 | 0 |
| August | 10886 | 2 | 1130 | 4921 | 4086 | 487 | 260 | 0 |
| September | 8251 | 8 | 1682 | 3975 | 2207 | 227 | 68 | 60 |
| October | 14304 | 0 | 2705 | 5405 | 5664 | 419 | 88 | 0 |
| Novermber | 8236 | 0 | 1563 | 3455 | 2870 | 268 | 73 | 6 |
| December | 7567 | 69 | 332 | 5187 | 1629 | 291 | 0 | 57 |
| | | | | | | | | |

# DIRECTED PATROL ACTIVITIES

## Polk County Sheriff's Office 2020

| February | | | | | |
|---|---|---|---|---|---|
| Date | Roadway | Stops | Citations | Warnings | Reason |
| 2/1/20 | Fertile | 1 | | 1 | Patroled, crossing center line |
| 2/1/20 | CR 11 | | | | Patroled |
| 2/2/20 | Erskine, 3rd St, 1st Ave | 2 | 1 | 1 | Patroled, speed, DUI |
| 2/2/20 | CR21 | 4 | | 4 | Patroled, speed |
| 2/2/20 | CR11 | | | | Patroled |
| 2/4/20 | CR11 | | | | Patroled |
| 2/5/20 | Win-E-Mac school patrol | | | | Patroled |
| 2/5/20 | CR17 | | | | Patroled |
| 2/5/20 | CR6, Fosston | | | | Patroled |
| 2/6/20 | CR11 | | | | Patroled |
| 2/7/20 | CR34, CR36, CR49, CR10, CR1, Winger, Fosston, CR6 | 1 | | 1 | Patroled, speed |
| 2/7/20 | 300th St SW, Hwy 32, 125th Ave SW, Hwy 102, 330th St SW | 3 | | 3 | Patroled, speed, equipment |
| 2/7/20 | Hwy 2, Fisher, 340th Ave SW | 1 | 1 | | Patroled, DUI |
| 2/8/20 | Fosston, S Johnson, Hillgoss, CR8, 385th St SE | 1 | | 1 | Patroled, speed |
| 2/9/20 | Fosston, 1st St W., N Mark Ave., 2nd St NE, N Hillestad Ave., N Newton Ave | 2 | | 2 | Patroled, speed, turn signal |
| 2/9/20 | CR6, CR3, CR2, CR5, CR8, CR5 | 1 | | 1 | Patroled, speed |
| 2/9/20 | CR20, 150th SW., CR21, 290th SW | 2 | | 2 | Patroled, speed |
| 2/10/20 | CR1, CR34, CR35, CR8, CR5, CR2, CR3, CR6, CR8 | 1 | | 1 | Patroled, speed |
| 2/13/20 | Fosston School Patrol | | | | Patroled |
| 2/14/20 | 2nd St., 5th Ave., Hwy 59, 350th St | 2 | | 2 | Patroled, equipment, parking in road right of way |
| 2/14/20 | US 75, Climax | 1 | | 1 | Patroled, equipment |
| 2/14/20 | School Patrol Win-E-Mac | | | | Patroled |
| 2/14/20 | School Patrol Fosston | | | | Patroled |

| | | | | | |
|---|---|---|---|---|---|
| 2/17/20 | 335th Ave Se, Grandstand Court, Hwy 2, 310th Ave SE, N Foss Ave., 6th St NE | 3 | | 3 | Patroled, equipment, driving conduct, expired tabs |
| 2/17/20 | CR1, CR31, 420th St SE | 1 | | 1 | Patroled, speed |
| 2/18/20 | CR9 W., 310th Ave Sw, Hwy 220 W, CR21, CR20 | 1 | 1 | | Patroled, speed |
| 2/18/20 | 150th Ave Sw., Hwy 102, Hwy 9, CR1 | 1 | | 1 | Patroled, speed |
| 2/18/20 | McIntosh, CR8, 400th St SE., Hwy 59, CR1, 420th St SE | 2 | | 2 | Patroled, speed |
| 2/19/20 | CR1, Fertile | | | | Patroled |
| 2/19/20 | Fosston School Patrol | | | | Patroled |
| 2/19/20 | School Patrol Climax | | | | Patroled |
| 2/19/20 | CR9, 380th Ave Sw., Hwy 220, 280th Ave SW | 3 | | 3 | Patroled, speed |
| 2/19/20 | School Patrol Fisher | | | | Patroled |
| 2/19/20 | School Patrol Win-E-Mac | | | | Patroled |
| 2/19/20 | CR8, McIntosh, CR1 | 1 | | 1 | Patroled, speed |
| 2/20/20 | CR12 | | | | Patroled |
| 2/20/20 | CR21 | | | | Patroled |
| 2/21/20 | 280th St SE, 170th Ave SE, CR38 | 2 | | 2 | Patroled, speed |
| 2/21/20 | Hwy 75, CR21 | 1 | 1 | | Patroled, stop sign |
| 2/22/20 | CR34, CR36, CR42, CR41, CR10, CR12, CR1, Hwy 59 | 2 | | 2 | Patroled, speed, proof of insurance |
| 2/22/20 | CR9 | | | | Patroled |
| 2/23/20 | CR19, 410th Ave SW | 1 | | 1 | Patroled, speed |
| 2/26/20 | Fisher School Patrol | | | | Patroled |
| 2/26/20 | Fosston School Patrol | | | | Patroled |
| 2/27/20 | Fosston School Patrol | | | | Patroled |
| 2/27/20 | Climax School Patrol | | | | Patroled |
| 2/28/20 | CR11, CR46 | | | | Patroled |
| 2/28/20 | Fosston School Patrol | | | | Patroled |
| 2/29/20 | CR2, 200th St, 220th St., 240th Str. | 3 | | 3 | Patroled, speed |
| | Totals | 43 | 4 | 39 | |

## Document Service Statistics February 2020

| | |
|---|---|
| Eviction Summons; Complaint | 5 |
| Letter; Affidavit; Other | 2 |
| Letter; Subpoena | 2 |
| Notice | 4 |
| Notice of Cancellation of Contract for Deed | 2 |
| Notice of Mortgage Foreclosure Sale; Help for Homeowners Notice; Notice of Homestead Designation; What Happens After The Forclosure Sale; Foreclosure Advice to Tenants | 7 |
| Notice of Motion & Motion; Affidavit; Order to Show Cause | 3 |
| Order | 2 |
| Order; Notice | 4 |
| Other | 4 |
| Petition; Notice; Order | 1 |
| Petition; Summons | 1 |
| Subpoena | 17 |
| Summons & Complaint | 45 |
| Summons; Complaint; Notice of Motion & Motion; Supporting Affidavit | 2 |
| Summons & Complaint; Supporting Affidavit | 2 |
| Summons & Notice | 1 |
| Summons; Notice; Other; Petition | 2 |
| Summons; Petition | 1 |
| Writ of Recovery and Order to Vacate | 3 |
| DANCO | 5 |
| Harrassment Restraining Order | 9 |
| Order for Continuance of HRO | 1 |
| Order for Continuance of OFP | 1 |
| Order for Protection | 2 |
| Order for Protection Following Hearing | 2 |
| Order Granting HRO After Hearing | 1 |
| Order to Show Cause for Contempt (Harassment) | 1 |

Paid Services: $4599.90

No Charge Services: $1348.14

# POLK COUNTY SHERIFF'S OFFICE

Sheriff James Tadman
Chief Deputy Mike Norland
600 Bruce Street • P.O. Box 416 • Crookston, MN 56716
218.281.0431 • Fax 218.281.0401
James.Tadman@co.polk.mn.us
www.co.polk.mn.us

CFS By Month and Primary INC Code - PCSO only

Printed on March 1, 2020

| Description | | Totals |
|---|---|---|
| 911 Duplicate Call | 3 | 3 |
| 911 Handled by Dispatch | 42 | 42 |
| 911 Hang Up | 41 | 41 |
| 911 Open Line | 3 | 3 |
| 911 Pocket Dial | 1 | 1 |
| Abandoned Vehicle | 2 | 2 |
| Alarm - Residential | 2 | 2 |
| Animal Complaint | 9 | 9 |
| Animal - Lost and Found | 3 | 3 |
| Assault | 2 | 2 |
| Assist Other Agency | 38 | 38 |
| Bad Checks - Fraud | 2 | 2 |
| Burglar Alarm - Audbile - Business | 2 | 2 |
| Burglar Alarm - Silent - Business | 7 | 7 |
| Burglary | 2 | 2 |
| Burglary Alarm - Audible - Bank | 2 | 2 |
| Child Protection Report | 16 | 16 |
| Civil Complaint | 6 | 6 |
| Civil Process | 221 | 221 |
| Conservations - Littering/Wildlife | 1 | 1 |
| Damage to Property | 4 | 4 |
| Death - Hospice | 1 | 1 |
| Domestic Violent | 2 | 2 |
| Drugs | 3 | 3 |
| Drugs - Investigation/Information | 1 | 1 |
| DWI COURT CHECK | 1 | 1 |
| Escape | 1 | 1 |
| Fall | 1 | 1 |
| Fire Alarm | 1 | 1 |
| Fire Structure | 1 | 1 |
| Fire Vehicle | 1 | 1 |
| Fraud | 2 | 2 |
| FTA Complaint | 7 | 7 |
| Harassment | 4 | 4 |
| Info | 17 | 17 |
| Intoxicated Subject | 2 | 2 |
| Investigations | 3 | 3 |
| Juvenile Offender | 2 | 2 |
| Juvenile - Other | 1 | 1 |

| Description | | Totals |
|---|---|---|
| Medical - Other | 3 | 3 |
| Missing Person | 2 | 2 |
| Motorist Assist | 48 | 48 |
| MVA - Boat, ATV or Snowmobile | 1 | 1 |
| MVA Injury | 1 | 1 |
| MVA - Property Damage | 10 | 10 |
| Order Violation - DANCO, OFP, Restraining Order | 5 | 5 |
| POR Checks | 9 | 9 |
| Probation Violation | 1 | 1 |
| Property - Lost and Found | 2 | 2 |
| Public Assist | 30 | 30 |
| Public Peace | 1 | 1 |
| Public Relations | 1 | 1 |
| Reckless Driver | 3 | 3 |
| Runaway | 2 | 2 |
| School Patrol | 83 | 83 |
| Shoplifting | 1 | 1 |
| Special Detail | 2 | 2 |
| Stolen Property | 1 | 1 |
| Stolen Vehicle | 2 | 2 |
| Suicide Threats | 2 | 2 |
| Suspicious Activity | 4 | 4 |
| Suspicious Person | 1 | 1 |
| Suspicious Vehicle | 4 | 4 |
| Theft | 4 | 4 |
| Traffic - All Other | 17 | 17 |
| Traffic Complaint | 6 | 6 |
| Traffic Hazard | 8 | 8 |
| Traffic Stop | 188 | 188 |
| Transport - Medical by Officer | 4 | 4 |
| Transport - MN Prison or Jail | 8 | 8 |
| Transport - Other | 22 | 22 |
| Transport - Out of State | 4 | 4 |
| Trespass | 3 | 3 |
| Unwanted Person | 1 | 1 |
| Vehicle Complaint | 3 | 3 |
| Vehicle Lock Out | 5 | 5 |
| Violation of Court Order | 4 | 4 |
| Vulnerable Adult | 3 | 3 |
| Warrant | 16 | 16 |
| Welfare Check | 13 | 13 |
| | 2 | 2 |
| Totals | 990 | 990 |

# Board of Commissioners

Polk County Government Center
612 N Broadway – Room 211
Crookston, MN 56716-1452

TO: POLK COUNTY BOARD OF COMMISSIONERS

FROM: JON STEINER, ENV. SVS. ADMIN.

MEETING DATE: March 24, 2020

AGENDA ITEM: Tire Recycling Contract - 2020

SUMMARY:

1. Polk Co Solid Waste programs has various agreements and contracts with vendors for recycling or material management. A service contract for waste tires is one of those types of contracts.

2. Major increases in Tire Recycling costs have been reported throughout the region. There is predominantly one tire recycler in the upper Midwest – Liberty Tire of Savage, MN.

3. Polk Co received a new contract for service in 2020, raising the rates from $165/ton to $200/ton + $20/ton environmental fee. Other Co's and businesses are incurring tip fees in excess of $245/ton.

4. Polk Co has experimented with several tire shredding options internally using the Komptech shredder purchased in 2017. Despite barriers by some divisions of MPCA to expanding upon these options, we want to keep that option for any contract.

## ACTION REQUESTED: (INFORMATION ONLY/MOTION/RESOLUTION)

1. Action/Motion. Approve ESA to execute contract for Tire Recycling service with Liberty Tire of Savage, MN with added language reserving the right to use the tires for any Polk County purpose without penalty.

Liberty
TIRE RECYCLING

RECEIVED
FEB 10 2020
POLK COUNTY ENV. SVS.

February 4, 2020

Thank you for being a loyal and valued customer --

We hope you understand that we have been absorbing the rising cost of labor, equipment, liability insurance, transportation costs as well as State and Federal permitting; which have all continued to increase each year. Additionally, we have found the issue of the decline in end-markets, as well as the impact of the import of tires from China has dramatically affected our industry.

Liberty Tire is dedicated to continuing servicing the Midwest and find it necessary to increase our service rates. I have enclosed your new Service Agreement for review and signature – The new pricing will be effective March 1,2020. Please return via mail, fax: 952-894-5061, or email: psherrier@libertytire.com.

.

Again, we want to thank you for being a great customer. We will continue to provide you with the best quality service. Please feel free to contact me at any time with any questions - my direct phone number is 952-808-3406.

Sincerely,

$1.65/ton to $2.00/ton

Phil Sherrier

Sales Manager

Enclosure

12498 Wyoming Avenue South, Savage MN 55378
952-894-5280 Fax 952-894-5061

Liberty TIRE RECYCLING

**Contractor:** Liberty Tire Services of Ohio, LLC dba
Liberty Tire Recycling, LLC
P.O. Box 300
130 Maine Street
St. Martin, MN 56376
Phone: 320.548.3496
Fax: 320.548.3515

## DROP AND HOOK AGREEMENT

**Customer Status:** ☐ New Customer ☐ Existing-New Contract ☐ Existing-Contract Renewal ☒ Price Change ☐ Service Change

**Service Type:** ☒ Drop & Hook ☐ Cage ☐ Roll Off

**Contract Customer / Invoice to:** _____ **Customer Account number:** STM 60672 GMN 56569

**Customer Name:** Polk County Environmental Service **FEIN No.:** _____

**Address:** 320 Ingersoll Ave., P O Box 375

**City and State:** Crookston, MN **Zip Code:** 56716

**County:** _____ **Fax Number:** _____

**Phone Number:** 218-281-6445

**E-Mail Address:** _____

**Check One:** Proprietor ☐ Partnership ☐ Corp ☐ **State of Incorporation:** _____

**Service:** Trailer transportation and processing, recycling and/or disposal of Customer's used tires ("Used Tires").

**Service Location:**

**Location Name:** same

**Address:** _____

**City and State:** _____ **Zip Code:** _____

**County:** _____

**Phone Number:** _____ **Fax Number:** _____

**E-Mail Address:** _____

**Service Contact:** _____ **Title:** _____

**Effective Date of Service:** 03/01/2020 **Term:** 36 mo. **Estimated Volume:** _____ **Select one:** ☐ tons per year ☐ loads per year

**Service Fees (Subject to annual adjustment pursuant to Section 3 of the attached General Conditions):**

| | | | |
|---|---|---|---|
| Container Drop Fee: | $ | | |
| Container Rent: | $ | | |
| Cost Per Load or Ton: | $ | 200.00 | per (check one): ☐ load ☒ ton |
| Overweight Charge (exceeding 15 tons per load): | $ | | per (check one): ☐ load ☐ ton |
| Standby Fee: | $ | | per hour |
| Rim Removal Fee: | $ | | per tire |
| Current Diesel Fuel Surcharge: | | Varaible | % percentage of billed revenue or charges |
| Minimum Billing Per Load (if applicable) | | | tons |

**Billing Terms:** ☐ COD ☒ Credit

**Special Conditions:** (Customer to initial below)

1. Terms net 30 days — JDS
2. Customer reserves right to use tires for own purposes w/o penalty — JDS
3. Environmental fee $ 20.00 / load — JDS.
4. See strikeouts & notes in General Conditions — JDS.

**Customer Signature:** _____ (Authorized Representative) **Date:** 3-24-20

**Print Customer Name and Title:** Jon D. Sterner Env. Svs. Admin.

**Contractor Signature:** _____ (Authorized Representative) **Date:** _____

**Print Contractor Name and Title:** Phil Sherrier/ Sales

| Service Type (select one): | Service Frequency (select one): |
|---|---|
| ☒ On Call | If weekly, estimated collections per week: ☐1 ☐2 ☐3 ☐4 ☐5 ☐6 ☐7 |
| ☐ Schedule | If not weekly, then every: ☐2wks ☐3wks ☐4wks ☐5wks ☐6wks ☐Other: _____ |

## GENERAL CONDITIONS OF DROP AND HOOK AGREEMENT

**Contractor named above or any of its applicable subsidiaries or affiliates performing hereunder ("Contractor") hereby warrants to Customer that all Used Tires collected from Customer shall be recycled, including reuse, in accordance with the used tire rules enacted by governing local, state and federal regulatory agencies.**

**1. Term.** The initial term of this Agreement shall be thirty-six (36) months, commencing on the Effective Date of Service, as may be extended herein ("Term"). ~~At the end of the initial thirty-six (36) month period and on each anniversary thereafter, the Term shall automatically be extended by one (1) additional year unless, at least sixty (60) days prior to the end of the Term, one party hereto notifies the other party hereto, in writing, that it does not wish to extend the Term beyond the then current expiration date.~~ Such ~~automatic~~ extension and option to cancel such ~~automatic~~ extension shall continue until this Agreement expires in accordance with the terms of this provision, or is terminated as otherwise provided herein, or is terminated by the mutual agreement of the parties hereto. Contractor agrees that if Customer no longer requires any Service for its Used Tires due to discontinuance of its business or relocation outside the area in which Contractor provides Service, Customer may terminate this Agreement by delivering written notice to Contractor at least sixty (60) days prior to the intended termination date and making payment of all amounts due Contractor on or before such intended termination date. ~~In the event Customer terminates this Agreement other than as provided above, or Contractor terminates this Agreement as a result of Customer's breach, Customer shall pay Contractor, as liquidated damages, a sum calculated as follows: (i) if the remaining Term of this Agreement is twenty-four (24) or more months, Customer shall pay the average of its past monthly charges multiplied by twenty-four (24); or (ii) if the remaining Term of this Agreement is less than twenty-four (24) months, Customer shall pay the average of its past monthly charges multiplied by the number of months remaining in the Term.~~

See #2 SPECIAL CONDITIONS

**2. Exclusivity.** Contractor has invested—and based upon this Agreement will invest—capital, expertise, time and resources to perform this Agreement. Accordingly, during the Term of this Agreement, (1) Customer agrees to deal, negotiate, and contract exclusively with Contractor for any and all Used Tire related services provided by Contractor to Customer under this Agreement, including without limitation, the transportation, processing, recycling, resale, and/or disposal of Used Tires (collectively, "Services"), (2) Customer agrees not to deal, negotiate, and/or contract with any other person, corporation, or other entity—whether directly and/or indirectly—for Services, and (3) in connection with this Agreement, the parties agree that each will not, directly or indirectly, interfere with, circumvent or attempt to circumvent, avoid, by-pass, hinder, evade, or obviate (a) one another, (b) each other's interests in or to the benefits of this Agreement, and/or (c) the interests or relationships that either party has with any other person, corporation, or other entity including without limitation customers, manufacturers, producers, sellers, buyers, vendors, brokers, dealers, distributors, refiners, and/or shippers to affect, change, increase, decrease, and/or avoid, directly or indirectly, the obligations of one another under this Agreement.

**3. Fees, Charges and Payment.** Customer shall pay Contractor for its Services in accordance with the Service Fees set forth on the first page of this Agreement and these General Conditions. Customer shall pay Contractor at Contractor's address on page 1 of this Agreement. The Service Fees and other charges set forth herein shall be adjusted after the first anniversary of the Effective Date of Service to reflect (a) increases in the Consumer Price Index, and (b) an annual four percent (4%) increase of all Service Fees and other charges hereunder. The Standby Fee shall be charged if Customer fails to generate a loaded trailer during any calendar month. The Rim Removal Fee shall be charged for each and every Used Tire that has not been derimmed. Customer shall prepay the Trailer Drop Fee and the cost of the first load when the first empty trailer is delivered. Thereafter, Customer shall prepay Contractor for each load when the replacement trailer is delivered unless credit is extended and approved, in which case payment shall be due within fifteen (15) days of invoice. Contractor has the right, in its sole discretion, to pass through to Customer any and all environmental cost recovery charges, environmental compliance charges or other similar charges related to upgrading or maintaining Contractor's facilities, including without limitation such charges which Contractor incurs in order to operate any or all of its facilities at operating standards which are in excess of what may be required by applicable federal, state or local environmental laws or regulations. Interest shall accrue and be charged on all past due amounts at the rate of one and one-half percent (1.5%) per month until paid, and Customer shall pay all costs and expenses incurred by Contractor in collecting any past due amounts, including without limitation reasonable attorneys' fees. If payment is not made when due, or if Customer otherwise breaches the terms of this Agreement and fails to cure the same within five (5) days of written notice of such breach, Contractor may remove any equipment on Customer's premises, suspend the provision of Services and/or terminate this Agreement upon written notice to Customer, in which event Contractor shall be entitled to recover all amounts then due and, in the event of termination, the liquidated damages described above.

**4. Fuel Surcharge.** Contractor may impose a fuel surcharge in the event the cost of diesel fuel increases at any time, or from time to time, during the Term. The fuel surcharge shall be calculated based on increases in the cost of diesel fuel as published by the Energy Information Administration of the US Department of Energy (www.eia.doe.gov) ("EIA") as determined by Contractor at any time, or from time to time, during the Term of this Agreement over a base cost of $1.30 per gallon (the "Fuel Surcharge Percentage"). The resulting Fuel Charge Percentage shall be multiplied by the aggregate of Customer's billed Service Fees and other charges for the period determined by Contractor in order to determine the amount of such fuel surcharge. The fuel surcharge as of the date of execution of this Agreement shall be the percentage set forth on page 1 of this Agreement, and may be increased or decreased at any time, or from time to time, by the Contractor as necessary and appropriate.

**5. Governmental Taxes, Fees and Charges.** Customer shall be responsible for any and all taxes, fees or other charges imposed by local, state or federal laws and/or regulations upon the collection, transportation, processing, recycling and/or disposal of Customer's Used Tires.

**6. Equipment.** The word "equipment" as used in these General Conditions shall mean over-the-road bulk trailers provided by Contractor to Customer for the storage and transportation of Used Tires. All equipment shall remain the property of Contractor and Customer shall have no right, title or interest in such equipment. Contractor shall have the absolute right to remove or replace any and all equipment at any time, and Customer shall be obligated to eliminate any obstruction that might hinder Contractor in removing or replacing the equipment. Customer shall provide a stable, paved parking space for the equipment, and shall not overload, move or alter the equipment, or use the equipment for purposes other than the storage of Used Tires to be collected by Contractor. Customer shall be responsible for the equipment's safekeeping, and shall be liable to Contractor for all loss and/or damage to the equipment while in Customer's possession (including fire and theft) except for reasonable wear and tear. On collection day, Contractor shall have clear, unimpeded access to the equipment. If the equipment is blocked so as to delay or prohibit collection, any additional collection cost shall be classified as an extra pick-up and charged to Customer's account. Customer agrees to carry insurance with sound and reputable insurers against fire, theft and other hazards, in such forms and in such amounts so that the value of the equipment located on Customer's premises shall at all times be covered from all such losses and risk and as Contractor may reasonably require, for the benefit of Customer and Contractor. Upon request, Customer shall provide Contractor with an insurance certificate evidencing the foregoing coverage. Customer shall not sell, lease, lend, move, transfer, encumber or pledge any equipment located on Customer's premises or allow any third parties to move or encumber the equipment located on Customer's premises. Customer shall give its secured lenders notice that Customer does not have an ownership interest in the equipment.

**7. Used Tires.** **Customer warrants to Contractor that all Used Tires delivered by it hereunder shall not have been** Knowingly **subject to any safety recall, whether official or unofficial, and not otherwise subject to a 'destroy only' obligation.** Customer also warrants that the Used Tires delivered to Contractor shall be in as dry a condition as possible (no more than 10 milliliters of water in each) and shall be free of oil, petroleum and any other hazardous or toxic wastes as defined by local, state or federal laws and/or regulations. It is understood and agreed that Customer shall not deliver to Contractor any split or chopped tires, solid rubber tires, baled tires, tires containing a heavy accumulation of dirt, **or tires exceeding 54 inches in height or 16 inches in width** or any waste other than Used Tires (collectively, "Unacceptable Waste"). Customer further agrees that if any Unacceptable Waste is delivered by Customer, Contractor may, at its election, (i) return such Unacceptable Waste to Customer, or (ii) charge a supplemental fee to Customer for special handling and/or disposal of such Unacceptable Waste.

**Customer initials**_____
**Date**_____

8. **Title.** Title to the Used Tires shall pass to Contractor upon either the (i) payment of Contractor's Service Fees and other charges due for such Used Tires, or (ii) removal of such Used Tires by Contractor from Customer's premises. If Customer fails to pay Contractor's Service Fees and/or other charges, Contractor, at its option, may unload and/or return Customer's Used Tires, in which event Customer shall remain liable to Contractor for 100% of the Service Fees and other charges due for such Used Tires. Notwithstanding the foregoing, title to and liability for Non-Conforming Tires shall always remain with Customer.

9. **Provision of Services.** To the extent not otherwise covered by insurance, Contractor shall be responsible for damages to Customer's property directly resulting from any actions of Contractor, its agents or employees in connection with providing the Services to Customer pursuant to this Agreement; provided, however, that Contractor shall not be responsible for any damages if Customer was aware of any condition affecting Customer's property which contributed to or caused such damage and did not inform Contractor.

10. **Indemnity and Related Provisions.** Customer agrees to pay, indemnify, defend, and hold harmless Contractor and its employees, agents, and representatives from and against any and all claims, causes of actions, controversies, demands, damages, losses, costs, fines and/or liabilities (collectively, "Causes of Action") relating to and/or arising out of (1) the operation, use, or possession of the equipment by Customer, (2) each and every deficiency, defect, characteristic, and/or other condition of Customer's property and/or Used Tires, including the delivery of Unacceptable Waste, (3) Customer's breach or nonperformance of any covenant, provision, representation or warranty made by Customer hereunder, (4) Customer's activities in connection with this Agreement or the Services, and (5) Customer's violation of any laws or regulations, save and except for Causes of Action resulting from Contractor's willful misconduct or grossly negligent conduct. This provision applies to and includes without limitation claims and causes of action for death, personal injury, and/or damage to property or the environment. This indemnification specifically includes any injury to Customer's employees that may result from the employee's handling or loading of Used Tires.

11. **Insurance.** In addition to Customer's obligations under Section 6 hereof, Customer shall maintain insurance in types and amounts appropriate for similarly situated persons. Without limiting the foregoing, Customer shall carry insurance adequate to cover all potential liabilities related to its business and its indemnification obligations under this Agreement.

12. **Right to Compete.** Customer grants Contractor the right to compete with any offer which Customer receives (or intends to make) relating to the provision of Used Tire collection, transportation, processing, recycling, resale and/or disposal services upon the termination of this Agreement, and agrees to give Contractor written notice of any such offer and a reasonable opportunity to respond to it. If Contractor agrees to provide services on the same terms as those set forth in the offer, Customer shall contract with Contractor for such services.

13. **Selling Used Tires.** Customer recognizes the value to the Contractor for those used tires that can be culled and sold as a used tire. The parties further acknowledge and agree that the pricing of the Service Fees set forth in this Agreement is premised upon no theft or diversion of Used Tires from the locations. Customer shall implement procedures to ensure individuals or businesses do not to take, purchase, or damage such good used tires from the Customer's locations. Customer shall take precautions to keep used tires secure and contained to eliminate the risk of tire theft or damage. If such theft occurs, Customer shall provide Contractor access to its loss prevention department and cooperate with all investigations and possible prosecutions of such theft perpetrators. If such theft continues, Contractor, at its sole discretion, may increase Service Fees for that particular location.

14. **Default and Remedies.** In the event either party breaches this Agreement and fails to cure any such breach within five (5) days of written notice thereof, the non-defaulting party shall have all rights and remedies set forth in this Agreement and all rights and remedies available at law or in equity.

15. **Force Majeure.** Except for their respective obligations to pay any sums of money due hereunder, each party hereto shall be excused for any delay or failure in the performance of their respective obligations hereunder, and shall not be liable for failure to perform or considered in default hereunder, if and to the extent that such delay or failure is caused by occurrences beyond such party's reasonable control and is not caused by such party, including, but not limited to, governmental laws or regulations, strikes or other labor disputes, civil commotion, sabotage, acts of terrorism, war, fire, casualty, flood, earthquake, explosion, weather, or acts of God.

16. **Notice.** Any notice to be given hereunder shall be in writing and shall be delivered by hand, certified mail or overnight courier to the respective party at the address set forth on the first page of this Agreement or such other address as either party shall designate by written notice to the other party. Any such notice shall be deemed effectively served as of the date of delivery unless delivery is refused or cannot be made, in which event notice shall be deemed given upon mailing.

17. **Waiver.** The failure of Contractor or Customer to enforce, at any time or for any period of time, any one or more of the provisions of this Agreement shall not be construed to be, and shall not be, a waiver of any such provision or provisions or of its right thereafter to enforce each and every such provision; provided, however, final payment to Contractor constitutes a full and final release of any claims that Customer may have against Contractor.

18. **Severability.** If any provision of this Agreement is determined to be illegal or unenforceable, such provision shall be deemed amended to the extent necessary to conform to applicable law, or, if it cannot be so amended without materially altering the intention of the parties, it shall be deemed stricken and the remainder of this Agreement shall remain in full force and effect.

19. **Governing Law & Venue.** This Agreement shall be governed by and construed in accordance with the laws of the Commonwealth of Pennsylvania without regard to conflict of laws principles, and any suit or cause of action brought to enforce the terms of this Agreement shall only be heard in the appropriate court of Allegheny County, Pennsylvania.

20. **General Provisions.** This Agreement (i) constitutes the entire contract between the parties with respect to the Services contemplated hereunder, (ii) may only be changed, modified or amended by a writing signed by both parties hereto, and (iii) shall be binding upon and inure to the benefit of the successors and assigns of the parties hereto. The representations, warranties and indemnifications contained herein shall survive the termination of this Agreement. If any conflict or differences exist in this Agreement between items that are printed and those that are typed or written, the typed or written language shall govern. Each party agrees, represents and warrants to the other that it has not made, and makes no statements, representations and/or warranties that are not contained in this Agreement, and neither party has relied on any fact, statement, representation, and/or warranty that is not contained in this written Agreement. Each party hereby represents ad warrants that the execution and performance of this Agreement have been duly authorized by such party and that this Agreement is a valid and binding obligation of such party, enforceable in accordance with its terms. This Agreement may be executed in two or more counterparts, each of which shall be deemed to be an original but all of which shall be deemed to be one and the same instrument. A facsimile or pdf signature binds the same as an original.

**Customer Initials**_____
**Date**_____

# Board of Commissioners

Polk County Government Center
612 N Broadway – Room 211
Crookston, MN 56716-1452

TO: POLK COUNTY BOARD OF COMMISSIONERS

FROM: JON STEINER, ENV. SVS. ADMIN.

MEETING DATE: March 24, 2020

AGENDA ITEM: 2020 SCORE Resolution

SUMMARY:

1. In 1989 the State of MN formed the Select Committee On Recycling & Environment (SCORE) to adopt recycling goals, requirements and funding support (SCORE Payment) in the form of a pass-through grant to fund up to 75% of the recycling program costs (25% funding from local). SCORE funding by MN is through a tax on solid waste.

2. Polk Co receives the pass-through funding each year. Despite the tax revenues going up, the SCORE funding level has not kept up with recycling program expenses. SCORE funds represent <25% of the recycling budget.

3. The State – through the Minnesota Pollution Control Agency (MPCA) – has informed Co's that MN Admin office has required each county to pass a resolution each year to now receive the SCORE fund payments.

4. The resolution the MPCA provided to Co's has language and terms contained within it which are of a concern or unnecessary. Revisions continue to come out of the MPCA office to address them. Resolutions are due 4/01/20.

## ACTION REQUESTED: (INFORMATION ONLY/MOTION/RESOLUTION)

1. Action/Resolution. If a boilerplate resolution from the MPCA is received prior to the Board meeting, it will be provided for consideration and passage.

MINNESOTA POLLUTION CONTROL AGENCY

# SCORE GRANT AGREEMENT FY20-21

State of Minnesota
Doc Type: Contract/Grant Reference

SWIFT Contract Number:
AI:
Activity ID: PRO20200

## A. COVERSHEET WITH SIGNATURES

| 1. ORGANIZATION ("Grantee") INFORMATION | |
|---|---|
| **Name** | |
| **2. ORGANIZATION ("Grantee") AUTHORIZED REPRESENTATIVE** | |
| **Name** | |
| **Address** | |
| **City, State, Zip code** | |
| **Phone Number** | |
| **Email** | |

| 3. MPCA ("State") AUTHORIZED REPRESENTATIVE | |
|---|---|
| **Name** | Jeannie Given |
| **Address** | 520 Lafayette Road North |
| **City, State, ZIP** | St. Paul, MN 55155 |
| **Phone** | 651-757-2459 |
| **Email** | jeannie.given@state.mn.us |

**4. ORGANIZATION ("Grantee") SIGNATURE**

**SIGNATURE OF OFFICIAL WITH AUTHORITY TO SIGN:**

NAME_____

SIGNED_____ DATE:_____

**I certify I have read the Grant agreement and will comply with all provisions including additional state, local, federal regulations and policies governing the funding that apply to my organization.**

SAMPLE

## B. GRANT AGREEMENT

**1. Term of Grant Agreement**

A. Effective date:

**April 1, 2020,** or the date the State obtains all required signatures, whichever is later.

B. Expiration date:

**June 30, 2021**, or until all obligations have been satisfactorily fulfilled, whichever occurs first.

C. Survival of Terms.

The following clauses survive the expiration or cancellation of this Grant agreement: Liability; State Audits; Government Data Practices and Intellectual Property; Publicity and Endorsement; Governing Law, Jurisdiction, and Venue; and Data Disclosure.

**2. Grantee's Duties**

The Grantee will carry out all duties under this agreement in accordance with Minn. Stat. § 115A.557.

**3. Time**

The Grantee must comply with all the time requirements described in this grant agreement. In the performance of this grant agreement, time is of the essence.

**4. Conditions of Payment**

All services provided by the Grantee under this grant agreement must be performed in accordance with Minn. Stat. § 115A.557 to the State's satisfaction, as determined by the State's Authorized Representative and in accordance with all applicable federal, state, and local laws, ordinances, rules, and regulations. The Grantee will not receive payment for work found by the State to be unsatisfactory or performed in violation of federal, state, or local law.

**5. Terms of Payment**

Payment amounts will be distributed according to Minn. Stat. § 115A.557, Subd.1.

**6. Assignment Amendments, Waiver, and Grant agreement Complete**

A. Assignment

The Grantee shall neither assign nor transfer any rights or obligations under this grant agreement without the prior written consent of the State, approved by the same parties who executed and approved this grant agreement, or their successors in office.

B. Amendments

Any amendments to this grant agreement must be in writing and will not be effective until it has been executed and approved by the same parties who executed and approved the original grant agreement, or their successors in office.

C. Waiver

If the State fails to enforce any provision of this grant agreement, that failure does not waive the provision or the State's right to enforce it.

D. Grant Agreement Complete

This grant agreement contains all negotiations and agreements between the State and the Grantee. No other understanding regarding this grant agreement, whether written or oral, may be used to bind either party.

**7. Liability**

Each party will be responsible for its own acts and behavior and the results thereof.

**8. State Audits**

Under Minn. Stat. § 16B.98, Subd.8, the Grantee's books, records, documents, and accounting procedures and practices of the Grantee or other party relevant to this grant agreement or transaction are subject to examination by the State and/or the State Auditor or Legislative Auditor, as appropriate, for a minimum of six years from the end of this grant agreement, receipt and approval of all final reports, or the required period of time to satisfy all state and program retention requirements, whichever is later.

**9. Government Data Practices and Intellectual Property Rights**

A. Government Data Practices

The Grantee and State must comply with the Minnesota Government Data Practices Act, Minn. Stat. Ch. 13, as it applies to all data provided by the State under this grant agreement, and as it applies to all data created, collected, received, stored, used, maintained, or disseminated by the Grantee under this grant agreement. The civil remedies of Minn. Stat. §13.08 apply to the release of the data referred to in this clause by either the Grantee or the State. If the Grantee receives a request to release the data referred to in this Clause, the Grantee must immediately notify the State. The State will give the Grantee instructions concerning the release of the data to the requesting party before the data is released. The Grantee's response to the request shall comply with applicable law

B. Intellectual Property Rights

*(a)* ***Intellectual property rights.*** All rights, title, and interest in all of the intellectual property rights, including copyrights, patents, trade secrets, trademarks, and service marks in the Works and Documents created and paid for under this Grant shall be jointly owned by the Grantee and the State. Works means all inventions, improvements, discoveries (whether or not patentable), databases, computer programs, reports, notes, studies, photographs, negatives, designs, drawings, specifications, materials, tapes, and disks conceived, reduced to practice, created or originated by the Grantee, its employees, agents, and Contractors, either individually or jointly with others in the performance of this grant agreement. Works include "Documents." Documents are the originals of any databases, computer programs, reports, notes, studies, photographs, negatives, designs, drawings, specifications, materials, tapes, disks, or other materials, whether in tangible or electronic forms, prepared by the Grantee, its employees, agents, or subcontractors, in the performance of this grant agreement. The ownership interests of the State and the Grantee in the Works and Documents shall equal the ratio of each party's contributions to the total costs described in the budget of this grant agreement, except that the State's ownership interests in the Works and Documents shall not be less than fifty percent (50%). The party's ownership interest in the Works and Documents shall not be reduced by any royalties or revenues received from the sale of the products or the licensing or other activities arising from the use of the Works and Documents. Each party hereto shall, at the request of the other, execute all papers and perform all other acts necessary to transfer or record the appropriate ownership interests in the Works and Documents.

*(b)* ***Obligations.***

(1) **Notification.** Whenever any invention, improvement, or discovery (whether or not patentable) is made or conceived for the first time or actually or constructively

reduced to practice by the Grantee, including its employees and subcontractors, in the performance of this grant agreement, the Grantee shall immediately give the State's Authorized Representative written notice thereof, and must promptly furnish the Authorized Representative with complete information and/or disclosure therein.

(2) **Representation**. The Grantee must perform all acts, and take all steps necessary to ensure that all intellectual property rights in the Works and Documents are the joint property of the State and Grantee, and that neither Grantee nor its employees, agents, or subcontractors retain any interest in and to the Works and Documents. The Grantee represents and warrants that the Works and Documents do not and will not infringe upon any intellectual property rights of other persons or entities. Notwithstanding Clause Liability, the Grantee shall indemnify, defend, to the extent permitted by the Attorney General, and hold harmless the State, at the Grantee's expense, from any action or claim brought against the State to the extent that it is based on a claim that all or part of the Works or Documents infringe upon the intellectual property rights of others. The Grantee will be responsible for payment of any and all such claims, demands, obligations, liabilities, costs, and damages, including, but not limited to, attorney fees. If such a claim or action arises or in Grantee's or the State's opinion is likely to arise, the Grantee must, at the State's discretion, either procure for the State the right or license to use the intellectual property rights at issue or replace or modify the allegedly infringing Works or Documents as necessary and appropriate to obviate the infringement claim. This remedy of the State will be in addition to and not exclusive of other remedies provided by law.

(3) **License.** The State hereby grants a limited, no-fee, noncommercial license to the Grantee to enable the Grantee's employees engaged in research and scholarly pursuits to make, have made, reproduce, modify, distribute, perform, and otherwise use the Works, including Documents, for research activities or to publish in scholarly or professional journals, provided that any existing or future intellectual property rights in the Works or Documents (including patents, licenses, trade or service marks, trade secrets, or copyrights) are not prejudiced or infringed upon, that the Minnesota Data Practices Act is complied with, and that individual rights to privacy are not violated. The Grantee shall indemnify and hold harmless the State for any claim or action based on the Grantee's use of the Works or Documents under the provisions of Clause 10.2(b)(2). Said license is subject to the State's publicity and acknowledgement requirements set forth in this grant agreement. The Grantee may reproduce and retain a copy of the Documents for research and academic use. The Grantee is responsible for security of the Grantee's copy of the Documents. A copy of any articles, materials or documents produced by the Grantee's employees, in any form, using or derived from the subject matter of this license, shall be promptly delivered without cost to the State.

**10. Workers Compensation**

The Grantee certifies that it is in compliance with Minn. Stat. §176.181, Subd. 2, pertaining to workers' compensation insurance coverage. The Grantee's employees and agents will not be considered State employees. Any claims that may arise under the Minnesota Workers' Compensation Act on behalf of these employees and any claims made by any third party as a consequence of any act or omission on the part of these employees are in no way the State's obligation or responsibility.

**11. Publicity and Endorsement**

A. Publicity

Any publicity regarding the subject matter of this grant agreement must identify the State as the sponsoring agency and must use the MPCA logo and language provided by the State's Authorized Representative. For purposes of this provision, publicity includes notices, informational pamphlets, press releases, research, reports, signs, and similar public notices prepared by or for the Grantee individually or jointly with others, or any subcontractors, with respect to the program, publications, or services provided resulting from this grant agreement. All projects primarily funded by state grant appropriations must publicly credit the State of Minnesota, including on the grantee's website when practicable.

B. Endorsement

The Grantee must not claim that the State endorses its products or services.

**12. Governing Law, Jurisdiction, and Venue**

Minnesota law, without regard to its choice-of-law provisions, governs this grant agreement. Venue for all legal proceedings out of this Grant agreement, or its breach, must be in the appropriate state or federal court with competent jurisdiction in Ramsey County, Minnesota.

**13. Termination**

A. Termination by the State

The State may immediately terminate this grant agreement with or without cause, upon 30 days' written notice to the Grantee. Upon termination, the Grantee will be entitled to payment, determined on a pro rata basis, for services satisfactorily performed.

B. Termination for Cause

The State may immediately terminate this grant agreement if the State finds that there has been a failure to comply with the provisions of this grant agreement, that reasonable progress has not been made or that the purposes for which the funds were granted have not been or will not be fulfilled. The State may take action to protect the interests of the State of Minnesota, including the refusal to disburse additional funds and requiring the return of all or part of the funds already disbursed.

C. Termination for Insufficient Funding

The State may immediately terminate this grant agreement if:

***(a)*** It does not obtain funding from the Minnesota Legislature

***(b)*** Or, if funding cannot be continued at a level sufficient to allow for the payment of the services covered here. Termination must be by written or fax notice to the Grantee. The State is not obligated to pay for any services that are provided after notice and effective date of termination. However, the Grantee will be entitled to payment, determined on a pro rata basis, for services satisfactorily performed to the extent that funds are available. The State will not be assessed any penalty if the contract is terminated because of the decision of the Minnesota Legislature, or other funding source, not to appropriate funds. The State must provide the Grantee notice of the lack of funding within a reasonable time of the State's receiving that notice.

**14. Data Disclosure**

Under Minn. Stat. § 270C.65, Subd. 3, and other applicable law, the Grantee consents to disclosure of its social security number, federal employer tax identification number, and/or Minnesota tax identification number, already provided to the State, to federal and state tax agencies and state personnel involved in the payment of state obligations. These identification numbers may be used in the enforcement of federal and state tax laws which could result in action requiring the Grantee to file state tax returns and pay delinquent state tax liabilities, if any.

**15. Availability of Records**

In the event a monitoring visit(s) is required by the State, the Grantee shall cooperate with the State and shall comply with the State's request for documentation and other information, before, during and/or after the visit(s).

# Board of Commissioners

Polk County Government Center
612 N Broadway – Room 211
Crookston, MN 56716-1452

| | |
|---|---|
| TO: | POLK COUNTY BOARD OF COMMISSIONERS |
| FROM: | JON STEINER, ENV. SVS. ADMIN. |
| MEETING DATE: | March 24, 2020 |
| AGENDA ITEM: | Landfill Expansion – Wetland Replacement |

SUMMARY:

1. Polk County applied to the Minnesota Pollution Control Agency (MPCA) for a renewal of its Landfill (LF) Complex Permit in 2015.

2. The MPCA issued the LF Permit renewal in 2017. It was contingent upon completion and approval of certain elements of the LF Permit process. Wetland delineation, flora/fauna survey and other wetland replacement requirements were some of those elements.

3. The wetland delineation and flora/fauna survey have been completed. A Minnesota Threatened Species of Plant – the Carex Sterilis (Sterile Sedge) was found within the southeastern portion of the LF expansion area.

4. Efforts to secure permits and approvals to address the Sterile Sedge and wetland issues have been met with opposition from Local/State/Federal regulatory agencies.

5. Polk has prepared options which include proceeding with original plan, reduced footprint option and modified expansion option have been presented to the 6-County Advisory Board for their input.

6. Polk County Solid Waste requires direction from Board on long-term planning and permitting.

## ACTION REQUESTED: (INFORMATION ONLY/MOTION/RESOLUTION)

1. Information/Action. Information on the options available will be presented for Board consideration. If consensus on direction is reached, to take action directing process. If no consensus is reached, information for consideration and action at later date.

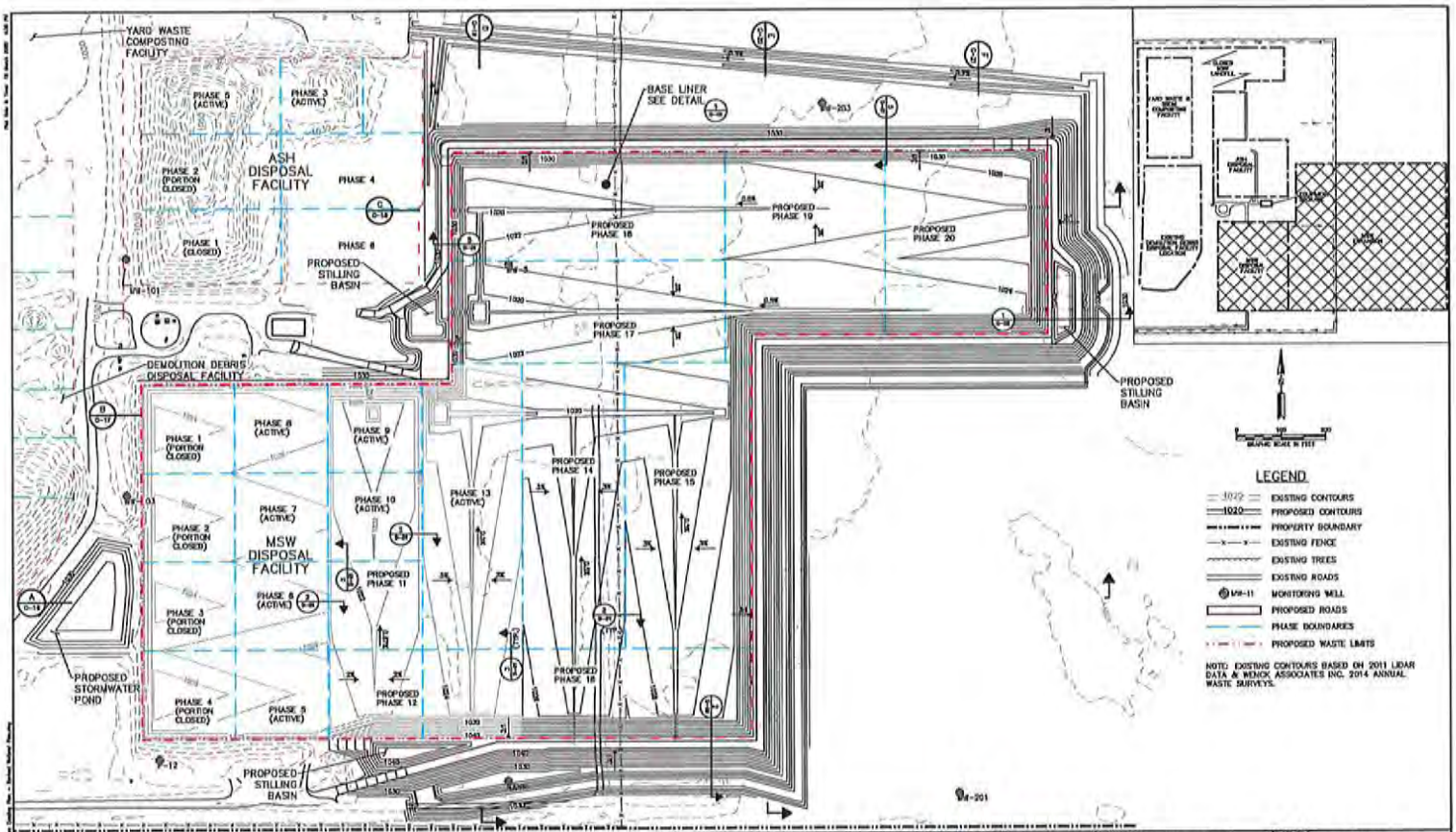


| REV | REVISION DESCRIPTION | DRN | APP | REV DATE |
|---|---|---|---|---|
| A | ISSUED FOR REVIEW | MDC | MPM | 06/01/15 |

SEAL

SUB CONSULTANT

PRIME CONSULTANT

WENCK ASSOCIATES

Responsive partner. Exceptional outcomes.

3333 FRONTAGE DR., SUITE 100 FARGO, NORTH DAKOTA 58103 (701) 297-9900 (701) 297-9901

PROJECT TITLE

POLK COUNTY LANDFILL PERMIT MODIFICATION

POLK COUNTY LANDFILL

OGNILLY, MINNESOTA

SHEET TITLE

MSW LANDFILL BASE LINER GRADING PLAN

| DWN BY | CHK'D | APP'D | DWG DATE | JUNE 2015 |
|---|---|---|---|---|
| MDC | JCL | MPM | SCALE | AS NOTED |
| PROJECT NO. 0546-0068 | | SHEET NO. C-02 | | REV NO. A |

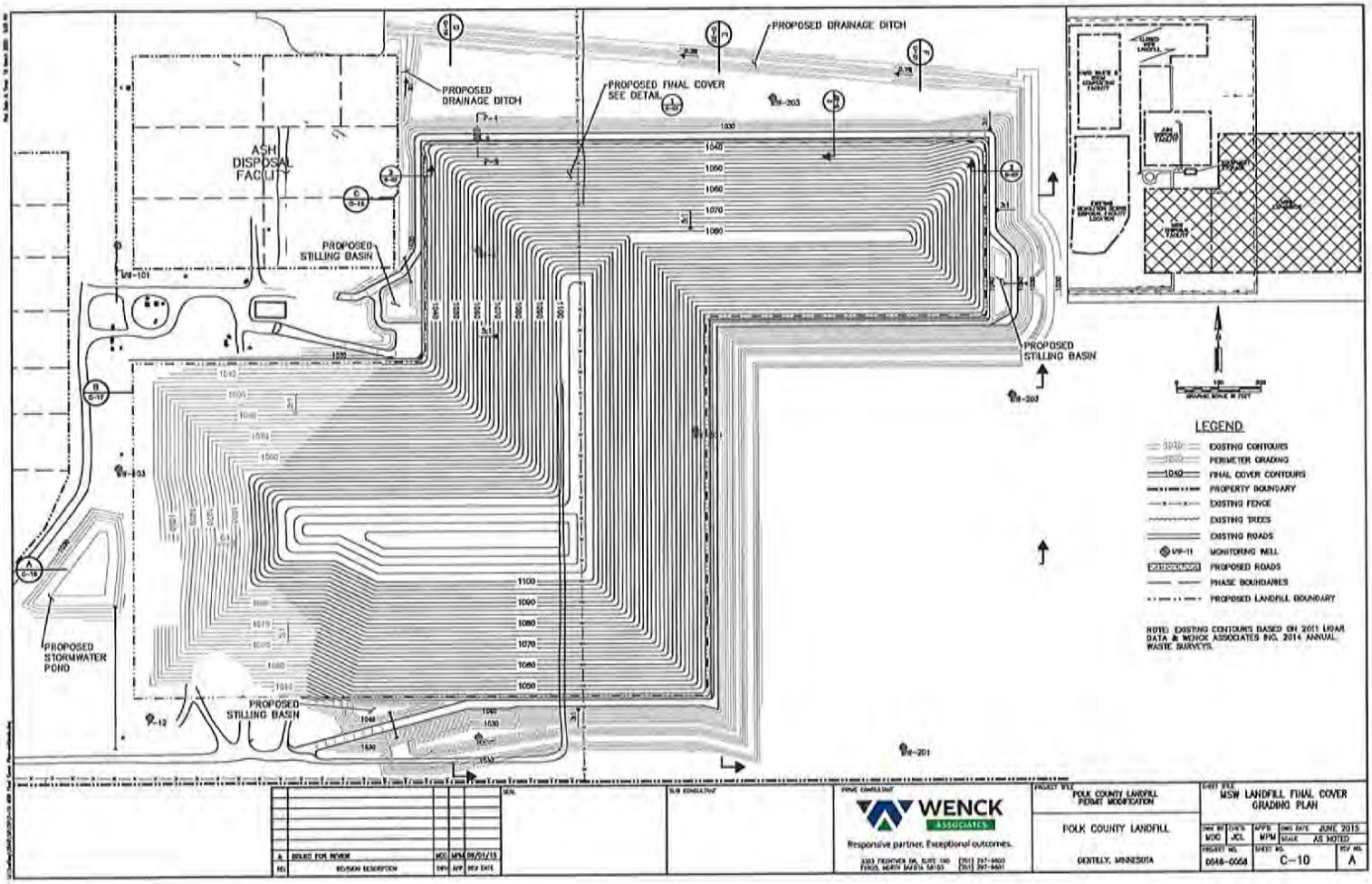
PROPOSED DRAINAGE DITCH
PROPOSED DRAINAGE DITCH
PROPOSED FINAL COVER SEE DETAIL
ASH DISPOSAL FACILITY
PROPOSED STILLING BASIN
PROPOSED STILLING BASIN
PROPOSED STORMWATER POND
PROPOSED STILLING BASIN
LEGEND
EXISTING CONTOURS
PERIMETER GRADING
FINAL COVER CONTOURS
PROPERTY BOUNDARY
EXISTING FENCE
EXISTING TREES
EXISTING ROADS
MONITORING WELL
PROPOSED ROADS
PHASE BOUNDARIES
PROPOSED LANDFILL BOUNDARY
NOTE: EXISTING CONTOURS BASED ON 2011 LIDAR DATA & WENCK ASSOCIATES INC. 2014 ANNUAL WASTE SURVEYS.
WENCK ASSOCIATES
Responsive partner. Exceptional outcomes.
POLK COUNTY LANDFILL PERMIT MODIFICATION
POLK COUNTY LANDFILL
DENTILLY, MINNESOTA
MSW LANDFILL FINAL COVER GRADING PLAN
JUNE 2015
AS NOTED
C-10
A

# Board of Commissioners

Polk County Government Center
612 N Broadway – Room 211
Crookston, MN 56716-1452

| | |
|---|---|
| TO: | POLK COUNTY BOARD OF COMMISSIONERS |
| FROM: | JON STEINER, ENV. SVS. ADMIN. |
| MEETING DATE: | March 24, 2020 |
| AGENDA ITEM: | Amendment #01 - CY2020 - CY2022<br>Polk County Roll-off Hauling Contract |

SUMMARY:

1. Polk County bid its Roll-off Hauling Contract for CY 2020 – CY 2022. This bid allows for extension after the term of the bid for up to an additional 3 years upon mutual agreement by both parties.

2. The Roll-off Hauling Contract includes service for material hauling between Crookston Transfer Station, Gentilly Landfill Complex and Fosston Resource Recovery Facility. Key services include: ash hauling, leachate hauling, fines hauling, demolition debris hauling.

3. Bids were set to all licensed waste haulers who indicated roll-off service, and was published in the official paper.

4. Lenes Sand & Gravel was awarded the bid on 11/26/19.

5. There was a defect in the bidders bid sheet. They had indicated they wanted to maintain the same bid amount with a percent increase. However, they missed one related to hauling between Crookston Transfer Station and the Appliance Storage Site – previously valued at a flat $100/load.

6. Lenes would like to use the flat rate of $100/load for hauling appliance roll-offs between the Transfer Station and Appliance Site added to the contract at the same rate as previous (no percent increase).

## ACTION REQUESTED: (INFORMATION ONLY/MOTION/RESOLUTION)

1. ACTION ITEM. Approval of Amendment #01 to the CY 2020 – 2022 Polk County Roll-off Hauling Contract to Lenes Sand & Gravel of Fosston, MN.

# CY 2020 - 2022 Roll Off Hauling Contract

## Amendment to Contract - 01

## 03-24-20

**The HAULER has requested a change to a defect in their bid related to the hauling of roll-off containers containing loose appliances from the Crookston Transfer Station to the Crookston Appliance Site (located behind American Crystal Sugar at the old Transfer Station site).**

**Work on this item in the contract includes:** *picking up the container, ensuring load is secured, transporting it to the ACS site (about 1 mile away), unlocking/opening the gate, entering the facility, closing the gate, transportation to the Appliance Site, unlocking/opening the gate, opening container doors, depositing material, closing the container, closing/locking gate, driving to ACS gate, opening and exiting facility, closing/locking gate, transporting empty container back to the Transfer Station, replacing the container.*

**Original Contract Language:**

The original contract requests a price per mile between the Crookston Transfer Station and Crookston Appliance Site for hauling roll-off containers full of appliances.

**Amended Contract Language:**

The amended contract language shall use a flat fee of $100 per load for all roll-off containers full of appliances to be transported between the Crookston Transfer Station and Crookston Appliance Site.

# Board of Commissioners

Polk County Government Center
612 N Broadway – Room 211
Crookston, MN 56716-1452

TO: POLK COUNTY BOARD OF COMMISSIONERS

FROM: Richard Sanders – County Engineer

MEETING DATE: 03-24-2020

AGENDA ITEM: New or Low Hour Used Motorgrader

SUMMARY:

1. Attached is the abstract of quotes received to furnish a new motorgrader.
2. Lowest responsible quote is ????.

ACTION REQUESTED: (INFORMATION ONLY/MOTION/RESOLUTION)

1. A motion by _____ seconded by _____ to award the quote to ???? in the amount of $?????

# Board of Commissioners

Polk County Government Center
612 N Broadway – Room 211
Crookston, MN 56716-1452

TO: POLK COUNTY BOARD OF COMMISSIONERS

FROM: Richard Sanders – County Engineer

MEETING DATE: 03-24-2020

AGENDA ITEM: Radio's for Highway Department

SUMMARY:

1. Attached are two quotes concerning the radio's that are used by the Polk County Highway Dept.
2. First is a quote to replace all the existing vhf narrow band radios with new 800 mhz radio's.
3. These radio's would work off the same tower as Polk County Sheriff and would be able to communicate between departments during a disaster.
4. Second Quote is for fixing the antenna for the vhf narrow band radios. This would require Stones to climb the tower and replace the existing antenna.
5. Our vhf radio's can not communicate with Dispatch/Sheriff's Dept/Fire and Rescue/EMS during a disaster.
6. Would be able to cover these expenses without changing the budget due to savings in other areas of the budget
7. Recommend Replacing Radios at this time.

ACTION REQUESTED: (INFORMATION ONLY/MOTION/RESOLUTION)

1. A motion by _____ seconded by _____ to approve the quote with Stones Radio of Grand Forks to ???? in the amount of $?????

STONE'S
*Mobile Radio Incorporated*

1550 47th Ave South Grand Forks, ND 58201 Tel: (701) 772-6691

# Sales Quotation

Quotation #: 02038917

Quote Valid For : 30 Days

Date: 3/19/2020
Acct Rep: Kevin Praska

PO Reference Number:

**From:**
Stone's Mobile Radio, Inc
1550 47th Ave S

Grand Forks, ND 58201
**Telephone:** (701) 772-6691
**Fax :** (701) 772-7096

**Acct#: POCOHI**
POLK COUNTY HWY DEPT
820 OLD HWY 75 SOUTH

CROOKSTON MN 56716
**Telephone:** 218-470-8267
**Contact :** RANDY HUOT

| QTY | DESCRIPTION | UNIT PRICE | TOTAL |
|---|---|---|---|
| 26.00 | APX1500 800 MOBILE | 2,655.50 | 69,043.00 |
| 4.00 | APX900 7/800 PORTABLE | 2,296.70 | 9,186.80 |
| 30.00 | RADIO PROGRAMMING | 76.92 | 2,307.60 |

| | |
|---|---|
| Subtotal: | 80,537.40 |
| Sales Tax: | 0.00 |
| Quotation Total: | 80,537.40 |

Terms: Warranty:

**Notes:**
Furnish new ARMER 1500 mobiles and APX 900 portables for Highway Dept.

STONE'S
*Mobile Radio Incorporated*

1550 47th Ave South Grand Forks, ND 58201 Tel: (701) 772-6691

# Sales Quotation

Quotation #: 02038798

Quote Valid For : 30 Days

Date: 3/9/2020
Acct Rep: Mike Nielsen

PO Reference Number:

From:
Stone's Mobile Radio, Inc
1550 47th Ave S

Grand Forks, ND 58201
Telephone: (701) 772-6691
Fax : (701) 772-7096

Acct#: POCOHI
POLK COUNTY HWY DEPT
820 OLD HWY 75 SOUTH

CROOKSTON MN 56716
Telephone: 218-470-8267
Contact : RANDY HUOT

| QTY | DESCRIPTION | UNIT PRICE | TOTAL |
|---|---|---|---|
| 1.00 | 150-160 DIPOLE | 1,395.00 | 1,395.00 |
| 350.00 | ANDREW 7/8" FOAM HELIAX | 7.16 | 2,506.00 |
| 2.00 | ANDREW MALE SILVER 7/8" L | 65.34 | 130.68 |
| 1.00 | CONTRACT LABOR | 5,500.00 | 5,500.00 |
| 6.00 | LABOR CHARGE | 98.00 | 588.00 |
| 90.00 | MILEAGE CHARGE | 0.59 | 53.10 |
| 6.00 | SHOP SUPPLIES | 6.86 | 41.16 |
| 1.00 | SHIPPING & HANDLING | 150.00 | 150.00 |
| 2.00 | GROUND KIT | 43.20 | 86.40 |
| 5.00 | HANGER CLIP | 60.46 | 302.30 |
| 2.00 | HOISTING GRIP | 59.30 | 118.60 |

| | |
|---|---|
| Subtotal: | 10,871.24 |
| Sales Tax: | 0.00 |
| Quotation Total: | 10,871.24 |

Terms:

Warranty:

Notes:
Replace antenna and coax at Marcoux

# Board of Commissioners

Polk County Government Center
612 N Broadway – Room 211
Crookston, MN 56716-1452

TO: POLK COUNTY BOARD OF COMMISSIONERS

FROM: Richard Sanders, County Engineer

MEETING DATE: 03-24-2020

AGENDA ITEM: SP 060-621-014 CSAH 21 from TH 220 to TH 75

SUMMARY:

1. Bids were received Friday March 13, 2020 at 2pm electronically
2. Bids were abstracted and the lowest responsible bidder was Knife River Materials of Bemidji, MN in the amount of $2,475,221.00
3. Abstracts to be handed out at Board Meeting

ACTION REQUESTED: (INFORMATION ONLY/MOTION/RESOLUTION)

1. A motion was made by _____ seconded by _____ to award SP 060-621-014 to Knife River Materials of Bemidji, MN in the amount of $2,475,221.00 and have the Chair and Administrator sign the contracts.

# Board of Commissioners

Polk County Government Center
612 N Broadway – Room 211
Crookston, MN 56716-1452

TO: POLK COUNTY BOARD OF COMMISSIONERS

FROM: Richard Sanders, County Engineer

MEETING DATE: 03-24-2020

AGENDA ITEM: SP 060-601-061 CSAH 1 from CSAH 10 to TH 59
SP 060-616-010 CSAH 16 from TH 75 to CSAH 9

SUMMARY:

1. Bids were received Friday March 13, 2020 at 2pm electronically
2. Bids were abstracted and the lowest responsible bidder was Knife River Materials of Bemidji, MN in the amount of $1,881,907.80
3. Abstracts to be handed out at Board Meeting

ACTION REQUESTED: (INFORMATION ONLY/MOTION/RESOLUTION)

1. A motion was made by _____ seconded by _____ to award SP 060-601-061 etc. to Knife River Materials of Bemidji, MN in the amount of $1,881,907.80 and have the Chair and Administrator sign the contracts.

# Board of Commissioners

Polk County Government Center
612 N Broadway – Room 211
Crookston, MN 56716-1452

TO: POLK COUNTY BOARD OF COMMISSIONERS

FROM: Richard Sanders, County Engineer

MEETING DATE: 03-24-2020

AGENDA ITEM: SAP 060-620-018 CSAH 20 from CSAH 19 to CSAH 21

SUMMARY:

1. Bids were received Friday March 13, 2020 at 2pm electronically
2. Bids were abstracted and the lowest responsible bidder was Knife River Materials of Bemidji, MN in the amount of $552,441.70
3. Abstracts to be handed out at Board Meeting

ACTION REQUESTED: (INFORMATION ONLY/MOTION/RESOLUTION)

1. A motion was made by _____ seconded by _____ to award SAP 060-620-018 to Knife River Materials of Bemidji, MN in the amount of $552,441.70 and have the Chair and Administrator sign the contracts.

3/13/2020

# PCHD
## Contract Bid Abstract

**Contract No.: 1307**
**Project No.: SAP 060-620-018**
**Bid Opening: 03/13/2020 2:00 PM**

| | Project: SAP 060-620-018 - CSAH 20 - Bituminous Overlay | | | | Knife River Materials | | RJ Zavoral & Sons, Inc. | |
|---|---|---|---|---|---|---|---|---|
| Line No. | Item | | Units | Quantity | Unit Price | Total Price | Unit Price | Total Price |
| 2 | 2104.503 | SALVAGE AGGREGATE SHOULDERING | L F | 29000 | $0.09 | $2,610.00 | $0.87 | $25,230.00 |
| 1 | 2104.504 | REMOVE BITUMINOUS PAVEMENT | S Y | 1200 | $9.50 | $11,400.00 | $9.30 | $11,160.00 |
| 3 | 2105.604 | GEOGRID | S Y | 1350 | $4.50 | $6,075.00 | $2.85 | $3,847.50 |
| 14 | 2211.509 | AGGREGATE BASE CLASS 5 MOD | TON | 800 | $17.00 | $13,600.00 | $19.50 | $15,600.00 |
| 4 | 2221.509 | SHOULDER BASE AGGREGATE CLASS 1 | TON | 600 | $20.00 | $12,000.00 | $22.00 | $13,200.00 |
| 5 | 2232.504 | MILL BITUMINOUS SURFACE (1.5") | S Y | 700 | $4.50 | $3,150.00 | $10.95 | $7,665.00 |
| 6 | 2232.603 | MILLED RUMBLE STRIPS | L F | 29000 | $0.35 | $10,150.00 | $0.50 | $14,500.00 |
| 7 | 2360.509 | TYPE SP 9.5 BITUMINOUS MIXTURE FOR PAVER LEVELING (2,B) | TON | 2700 | $54.25 | $146,475.00 | $58.50 | $157,950.00 |
| 8 | 2360.509 | TYPE SP 9.5 WEARING COURSE MIX (2,B) | TON | 6200 | $54.25 | $336,350.00 | $58.50 | $362,700.00 |
| 9 | 2563.601 | TRAFFIC CONTROL | LS | 1 | $5,080.00 | $5,080.00 | $7,925.00 | $7,925.00 |
| 10 | 2580.503 | INTERIM PAVEMENT MARKING | L F | 2500 | $0.35 | $875.00 | $1.00 | $2,500.00 |
| 11 | 2582.503 | 4" SOLID LINE PAINT | L F | 6000 | $0.09 | $540.00 | $0.10 | $600.00 |
| 12 | 2582.503 | 6" SOLID LINE PAINT | L F | 30000 | $0.13 | $3,900.00 | $0.14 | $4,200.00 |
| 13 | 2582.503 | 4" BROKEN LINE PAINT | L F | 2630 | $0.09 | $236.70 | $0.10 | $263.00 |
| | | | | | | | | |
| | Totals for Project SAP 060-620-018 | | | | | $552,441.70 | | $627,340.50 |
| | | | | | | | | |
| | Totals for Contract 1307 | | | | | $552,441.70 | | $627,340.50 |

**I hereby certify that this is an exact reproduction of bids received.**

**Certified By:** _____ **License No.** _____
**Date:** _____

RESOLUTION OF THE POLK COUNTY
BOARD OF COMMISSIONERS

**Declaring A State Of Emergency (COVID-19)**

**RESOLUTION (2020-34)**

The following Resolution (2020-34) was offered by Commissioner:

WHEREAS, The COVID-19 pandemic event will impact the population of Polk County and its cities due to the disruption of services, to include the closure of schools, childcare services and other services that will negatively impact day to day life; and

WHEREAS, The Polk County Emergency Management Director requests the Polk County Board declare Polk County in a STATE OF EMERGENCY for the COVID-19 pandemic event of March 2020.

NOW THEREFORE BE IT RESOLVED, That the Polk County Board of Commissioners declares Polk County in a State of Emergency for conditions resulting from the COVID-19 pandemic event of March 2020.

Commissioner seconded the foregoing resolution and it was declared adopted upon the following vote. YEAS: NAYS:

STATE OF MINNESOTA )
) ss
COUNTY OF POLK )

I, Charles S. Whiting, County Administrator to and Clerk of the Polk County Board of Commissioners do hereby certify that I have compared the foregoing resolution with the original resolution filed in my office on the 24th day of March, 2020, and that the same is a true and correct copy of the whole thereof.

WITNESS my hand and Official Seal of Polk County at Crookston, Minnesota this 24th day of March, 2020.

_____
Charles S. Whiting, County Administrator
Clerk of the Board

RESOLUTION OF THE POLK COUNTY
BOARD OF COMMISSIONERS

**Restricting Public Access To County Buildings**
**During The Novel Coronavirus Outbreak Of 2020**

**RESOLUTION (2020-35)**

The following resolution (2020-35) was offered by Commissioner:

WHEREAS, On March 13, 2020, the Governor of the State of Minnesota declared a peacetime emergency related to the transmission of the novel coronavirus and its resulting illness, which is designated as COVID-19;

WHEREAS, COVID-19 is a viral respiratory illness caused by a novel coronavirus, which is potentially fatal and known to spread rapidly among populations without preventative measures and rapid action by local authorities;

WHEREAS, Public health authorities have recommended that action be taken to reduce likelihood of novel coronavirus transmission in public places and in order to slow down "community transmission" of the virus;

WHEREAS, The Polk County Board of Commissioners has a responsibility to manage operations within its facilities in a way that best protects Polk County employees from becoming ill and best prevents or slows the transmission of the novel coronavirus;

WHEREAS, Many cities and counties in Minnesota are restricting public access to city and county buildings in light of the state of emergency and the COVID-19 outbreak;

WHEREAS, On March 17, 2020, the Polk County Board of Commissioners passed a resolution authorizing the Polk County Administrator and the Board Chair to limit the public's access to Polk County buildings if deemed necessary due to the COVID-19 outbreak; and

WHEREAS, On Friday March 20, 2020, The County Administrator, in consultation with the Board Chair, closed Polk County offices to the general public pending response to mitigation efforts against the COVID-19 virus; and

WHEREAS, Minn. Stat. 373.052, subd. 1b, authorized the County Board to close county offices if there is an emergency situation, public business is transacted at other reasonable times and places, and the public interest is served. That statute also authorizes the County Board to retroactively approve an emergency closing at its next succeeding meeting; and

WHEREAS, The Polk County Board of commissioners believes that the public interest will be served by limiting public access to county buildings in light of the COVID-19 outbreak.

THEREFORE BE IT RESOLVED THAT:

1. Effective as of noon, Friday, March 20, 2020, all county buildings are closed to physical public access until further notice except as allowed by the County's modified procedures for access to county services referred to above.
2. The County Administrator is directed to work with county department heads to develop and institute procedures and policies for the provision of essential county services without the requirement of entry into county buildings; primarily by phone, email, and other means, without unnecessary face-to-face contact between members of the public and county employees.
3. Any procedures shall be consistent with the Orders issued by the Supreme Court of the State of Minnesota on March 13, 2020, and March 20, 2020.
4. Any procedures shall be consistent with Open Meeting Law (providing access of the public to public meetings of public bodies), Government Data Practices Law, the Americans with Disabilities Act, or any other state or federal law.
5. Closure of Polk County buildings will continue until further resolution of the County Board or until otherwise directed by the County Administrator.

Commissioner seconded the foregoing resolution and it was declared adopted upon the following vote: YEAS: NAYS:

STATE OF MINNESOTA)
)ss
COUNTY OF POLK )

I, Charles S. Whiting, County Administrator to and Clerk of the Polk County Board of Commissioners do hereby certify that I have compared the foregoing resolution with the original resolution filed in my office on the 24th day of March, 2020, and that the same is a true and correct copy of the whole thereof.

WITNESS my hand and Official Seal of Polk County at Crookston Minnesota this 24th day of March 2020.

_____
Charles S. Whiting, County Administrator
Clerk of the Board

# Board of Commissioners

Polk County Government Center
612 N Broadway – Room 211
Crookston, MN 56716-1452

| | |
|---|---|
| **TO:** | POLK COUNTY BOARD OF COMMISSIONERS<br>CHUCK WHITING, POLK COUNTY ADMIN. |
| **FROM:** | SARAH REESE – PUBLIC HEALTH |
| **MEETING DATE:** | March 24, 2020 |
| **AGENDA ITEM:** | COVID-19 UPDATE |
| **SUMMARY:** | Update information on COVID-19 |
| **ACTION:** | For information only |